National Aeronautics and Space Administration

George C. Marshall Space Flight Center
Marshall Space Flight Center, AL 35812

October 1, 2018

Reply to Attn of: EV44 (18-004)

TO: KSC-SII30/Lisa Huddleston

FROM: EV44/Barry C. Roberts

SUBJECT: July 2018 Meteorological Support Interface Control Working Group (MSICWG) Instrumentation, Data Format, and Networks Document

The enclosure to this memorandum contains contractor report JPID-FY18-01852 "July 2018 Meteorological Support Interface Control Working Group (MSICWG) Instrumentation, Data Format, and Networks Document". The purpose of the attached report is to document the meteorological instrumentation, data formats and local computer networks discussed at the MSICWG meetings.

Please contact Barry C. Roberts at 256-544-6124 or James Brenton at 256-544-9142 if there are any questions concerning the attached report.

Barry C. Roberts
Lead, Terrestrial and Planetary Environments Team
Natural Environments Branch

Victoria Coffey (Acting)
Chief, Natural Environments Branch

cc:
MSFC EV44/ Karen Altino, Robert Barbré, James Brenton, Kerry (Lee) Burns, Ryan Decker, Frank Leahy, John Orcutt
KSC BAD00/ Kristin Smith
JSC/WS8/ Tim Garner
JSC/CM461/ Paul Duffin
Patrick Air Force Base/45WS/SYA/Jon Saul
Patrick Air Force Base/45RMS/RMRA/Richard Avvampoto

July 2018 Meteorological Support Interface Control Working Group (MSICWG) Instrumentation, Data Format, and Networks Document

James C. Brenton
Jacobs Space Exploration Group / MSFC Natural Environments Branch
james.c.brenton@nasa.gov

History Page

Description	Release Date
Initial Version of Report Released to MSICWG Community	03/10/17
Updated report to include format of Upper Air Forecast, removed 4DLSS from list of active instruments, and updated Data Network maps	07/09/18

Table of Contents

1.0 Introduction 6
2.0 Instrumentation Overview 7
2.1 WINDS Tower, including LC-39B Met Instrumentation 7
2.2 KSC TDRWP 9
2.3 915-MHz DRWP 9
2.4 AMPS Flight Elements 9
2.5 MERLIN 10
2.6 LPLWS – Field Mill and Rain Gauge Network 10
2.7 ER C-Band Weather Radar 10
3.0 Current Data Formats 11
3.1 WINDS Tower, including LC-39B Met Instrumentation 12
3.2 KSC TDRWP 16
3.3 915-MHz DRWP 22
3.4 AMPS Flight Elements 26
3.5 4DLSS 33
3.6 MERLIN 35
3.7 LPLWS – Field Mill and Rain Gauge Network 35
3.8 ER C-Band Weather Radar 36
3.9 Upper Air Forecast Generated by SMG 36
4.0 Proposed Format Updates 39
4.1 WINDS Tower, including LC-39B Met Instrumentation 39
4.2 KSC TDRWP 41
4.3 915-MHz DRWP 41
4.4 LRFE 42
4.5 AMPS Winds Only Flight Element 42
4.6 MERLIN 43
4.7 LPLWS – Field Mill and Rain Gauge Network 43
4.8 ER C-Band Weather Radar 43
5.0 Data Network 44
5.1 ER MIDDS and REIN System 44
5.2 KSC Weather Systems and Networks 45
5.3 MSFC Weather Systems 47
5.4 JSC Weather Systems 48
Appendix A: Acronyms 49
Appendix B: References 50

List of Tables

Table 1: List of WINDS Towers and Locations 7
Table 2: Wind Tower MDTF of Header Data 13
Table 3: Wind Tower MDTF of Data 15
Table 4: Fixed AMPS Flight Element and TDRWP Header MDTF 17
Table 5: TDRWP Specific Header MDTF 18
Table 6: TDRWP MDTF of Data 19
Table 7: TDRWP MDTF of Termination and Meta Data 20
Table 8: 915-MHz DRWP MDTF of Header Data 23
Table 9: 915-MHz DRWP MDTF of Data 25
Table 10: 915-MHz DRWP MDTF of Termination Flag 25
Table 11: LRFE MDTF of Data Levels Header 27
Table 12: LRFE MDTF of Data 28
Table 13: LRFE MDTF of Data Levels Termination Records 29
Table 14: LRFE MDTF of Mandatory Levels Header Data 29
Table 15: LRFE MDTF of Mandatory Levels Data 30
Table 16: LRFE MDTF of Significant Levels Header Data 30
Table 17: LRFE MDTF of Significant Levels Data 30
Table 18: LRFE MDTF of File Termination Records 31
Table 19: Winds Only AMPS Flight Element MDTF of Header Data 32
Table 20: Winds Only AMPS Flight Element MDTF of Data 32
Table 21: Winds Only AMPS Flight Element MDTF of Termination Records 32
Table 22: UF MDTF Header 37
Table 23: UF MDTF of Header Data 38
Table 24: UF MDTF of Data Levels and Termination Flag 38

List of Figures

Figure 1: Example of WINDS MDTF 12
Figure 2: Example of TDRWP MDTF 16
Figure 3: Example of 915-MHz DRWP MDTF 22
Figure 4: Example of LRFE MDTF 26
Figure 5: Example of HRFE MDTF 31
Figure 6: Example of CGLSS MIDDS Format 33
Figure 7: Example of 4DLSS CC KSC Weather Archive Format 34
Figure 8: Example of 4DLSS CG KSC Weather Archive Format 34
Figure 9: Example of MERLIN CC and CG KSC Weather Archive Format 35
Figure 10: Example of LPLWS Field Mill Electric Potential Format 35
Figure 11: Example of LPLWS Field Mill Rain Gauge Format 36
Figure 12: Example of UF MDTF 37
Figure 13: Example of Proposed WINDS Format 40
Figure 14: Example of Proposed KSC TDRWP Format 41
Figure 15: Example of Proposed 915-MHz DRWP Format 41
Figure 16: Example of Proposed LRFE Format 42
Figure 17: Example of Proposed AMPS Winds Only Balloons Format 42
Figure 18: ER MIDDS and REIN Network and System 45
Figure 19: KSC Weather Systems and Networks 46
Figure 20: MSFC Weather Systems and Networks 47
Figure 21: JSC Weather Systems and Networks 48

1.0 Introduction

The purpose of this document is to provide an overview of meteorological instrumentation discussed at the Meteorological Support Interface Control Working Group (MSICWG), a reference for data formats currently used by members of the group, a summary of proposed formats for future use by the group, and an overview of the data networks of the group's members. This document will be updated as new systems are introduced, old systems are retired, and when the MSICWG community necessitates a change to the formats.

This report was revised in July 2018 to include numerous updates to the instrumentation, data formats and data network diagrams. During the development of various Day-of-Launch (DOL) software, the MSICWG community expressed a need for a file format for the data contained in the Upper Air Forecast. The Upper Air Forecast is to be provided by the National Oceanic and Atmospheric Administration (NOAA) National Weather Service (NWS) Spaceflight Meteorology Group (SMG) during DOL operations. Section 3.9, "Upper Air Forecast Generated by SMG," was added to document the format of the Upper Air Forecast. Additionally, Section 2.5 was renamed to describe the Mesoscale Eastern Range Lightning Information Network (MERLIN) and the description of the 4 Dimensional Lightning Surveillance System (4DLSS) was removed as the 4DLSS is no longer accessible to the MSICWG community as of September 2017. However, Section 3.5 remains in the report for users who need a reference for the format of archived 4DLSS data. Finally, the report was updated to more detailed descriptions of the data networks and the roles and uses of servers.

The MSICWG consists of personnel from the National Aeronautics and Space Administration (NASA) Kennedy Space Center (KSC), NASA Marshall Space Flight Center (MSFC), NASA Johnson Space Center (JSC), SMG and the United States Air Force (USAF) 45th Space Wing and Weather Squadron. The purpose of the group is to coordinate the distribution of weather related data to support NASA space launch related activities.

2.0 Instrumentation Overview

This section provides an overview of the instrumentation, coordinated through the MSICWG, used to generate weather data.

2.1 WINDS Tower, including LC-39B Met Instrumentation

The Weather Information Network Display System (WINDS) provides meteorological data from 33owers located within the USAF Eastern Range (ER), KSC, and nearby area. The towers vary in height and meteorological measurement capabilities. For instance, Tower 313 is the only tower that has the ability to measure atmospheric pressure. However, almost all towers have the instruments to measure wind speed, wind direction, temperature, and dew point. Several WINDS towers are associated with launch complexes such as Launch Complex-39 B (LC-39B). The table below includes a list of towers currently available in the Meteorological Data Transfer Format (MDTF), their latitude and longitude, and a brief description of their locations.

Table 1: List of WINDS Towers and Locations

Tower ID Number	Latitude	Longitude	Location	Notes
1	28.43383367	-80.57339342	CCAFS, Pier Road and Safety Road	
2	28.44425806	-80.56205269	CCAFS, Pier Road	Two arms face NW and SE
3	28.45981228	-80.52671336	CCAFS, Complex 46	Coastal Tower
6	28.51298142	-80.56130344	CCAFS, Complex 20	Two arms face NW and SE
17	28.44658667	-80.56517425	CCAFS, Complex 17	
19	28.74347789	-80.70052972	Mosquito Lagoon	Coastal Tower
22	28.79747406	-80.73779975	Shiloh Beach	Coastal Tower
36	28.47209642	-80.53931594	SLC 36	
40	28.56216942	-80.57855364	SLC 40	
41	28.58363889	-80.5842425	SLC 41	
108	28.53585147	-80.57479178	CCAFS, Cape Road	
110	28.56971917	-80.58641417	CCAFS, Titan Road	Two arms face NW and SE
211	28.60614492	-80.62143711	KSC, Cochran Cove East	Located next to Crawler way
300	28.40478717	-80.65192236	Bennett Causeway	

303	28.45997917	-80.571125	CCAFS, Flight Control Road	Next to Skid Strip at CCAFS
311	28.6027475	-80.64137778	KSC, Cochran Road West	Approximately 1.1 miles Northeast of VAB
313	28.62557686	-80.65707681	KSC, Workman Pond	500 foot tower with arms facing NE and SW. Located at approximate halfway point between NASA Shuttle Landing Facility and LC-39 B
397	28.627142	-80.620873	Complex 39 B	Three towers each with data from 132 to 451 feet
403	28.45857222	-80.59231333	CCAFS, Area 1	
412	28.60625444	-80.6738725	KSC, Apollo/Saturn V Center	
415	28.65857269	-80.6998165	Kennedy Parkway North	
418	28.70554258	-80.72646025	Marguerite Road	
421	28.77546597	-80.80432864	Courtenay Parkway North	
506	28.51582397	-80.63999911	KSC, Industrial Area	
509	28.56228339	-80.66940514	KSC, Schwartz Road	Approximately 2.8 miles Southwest of VAB
714	28.64313444	-80.74818522	Highway 402	
803	28.46317667	-80.67017806	East Crisafulli Road, Courtenay	
819	28.74640475	-80.87071631	Scottsmoor, FL	
1000	28.40791839	-80.76038294	Sharpes, FL	
1007	28.52717917	-80.77420167	NASA Causeway	
1012	28.60561797	-80.82480033	Titusville, FL	
1204	28.48428633	-80.78557264	Port St. John, FL	
9404 (RSA 0795)	28.33818103	-80.732096	Rockledge, FL	

2.2 KSC TDRWP

The KSC Tropospheric Doppler Radar Wind Profiler (TDRWP) measures wind speed and wind direction data from 1,795-19,430 meters. The TDRWP is located near the Space Shuttle Landing facility at the site of the former system, the 50-MHz DRWP. The TRDWP uses a four beam configuration and operates at 48-MHz. Profiles are generated every five minutes, and each profile contains 119 range gates spaced by approximately 150 meters. In addition to wind speed and direction, the TDRWP output file contains signal power, noise level, spectral width, number of first guess propagations, and a quality control flag.

2.3 915-MHz DRWP

A network of five 915-MHz Doppler Radar Wind Profilers (DRWP) are operated by the ER and are located throughout the KSC and Cape Canaveral Air Force Station (CCAFS) area. These DRWPs report wind speed and wind direction from 130 to 6,100 meters. This altitude range provides coverage from the highest recorded values from the WINDS towers to the lower portion of TDRWP profiles. The 915-MHz DRWPs operate in a three-beam configuration with one vertical beam and two orthogonal oblique beams. Profiles from each DRWP are generated every 15 minutes and contain 60 range gates spaced by approximately 100 meters.

2.4 AMPS Flight Elements

Two types of Automated Meteorological Profiling System (AMPS) flight elements exist: Low-Resolution Flight Elements (LRFE) and High Resolution Flight Elements (HRFE). The LRFE use a standard latex weather balloon with a Global Positioning System (GPS) tracked sonde that contains sensors for temperature and relative humidity. Wind measurements from the balloon are computed from the balloon's horizontal position as measured by the GPS. Altitude is directly measured from the GPS. The low-resolution balloons can reach an altitude of over 100,000 feet. The HRFE uses a spherical balloon with small cone-like protrusions over the surface to reduce self-induced balloon motions, and only provides GPS-based wind measurements. Because the balloon's volume remains constant throughout ascent, high-resolution balloons typically reach their maximum altitude below 60,000 feet.

In addition to the AMPS HRFE, radar-tracked Jimspheres are used to produce high-resolution wind profiles. Although the Jimsphere and HRFE use similar balloons, the flight elements differ in how the position is tracked. Jimsphere balloons have a reflective aluminized coating so that their position can be tracked by radar. HRFEs are made of a clear plastic and are tracked by a GPS unit on the flight element.

2.5 MERLIN

MERLIN detects and locates both Cloud-to-Ground (CG) and Cloud-to-Cloud (CC) lightning and generates two separate sets of data. MERLIN uses ten Total Lightning Sensor (TLS)-200 sensors. The system is used to ensure the safety of personnel and assets for launches and launch operations. MERLIN replaced 4DLSS in 2017.

2.6 LPLWS -Field Mill & Rain Gauge Network

The Launch Pad Lightning Warning System (LPLWS) is a network of 31 electrostatic field sensors housed in field mills, each measuring the vertical component of the electrostatic field. Each mill uses a rotating and grounded metallic shutter to alternately cover and uncover a set of insulated stators that respond to the vertical component of the electrostatic field. The two dimensional maps produced by the mills show approximately where the cloud charges are located. Rain gauges are co-located with the field mills, providing hourly and daily rainfall totals.

2.7 ER C-Band Weather Radar

The USAF ER C-Band Weather Radar has a range of 250 nautical miles and is used for severe weather and flash flood warnings, launch support, and resource protection at the ER.

3.0 Current Data Formats

This section gives an overview of current data formats used for weather data generated by the instrumentation described in Section 2.0. Many of the data files used to record observations from these instruments use the Meteorological Data Transfer Format (MDTF). The MDTF has historical precedence as it has been used by the Air Force, NASA, and commercial launch customers since the Space Shuttle Program. The MSICWG has agreed upon using the MDTF for data files that support WINDS Towers, the TDRWP, the 915-MHz DRWPs, and AMPS Flight Elements. The MSICWG has agreed upon using unique, system specific formats for the 4DLSS, MERLIN, and LPLWS.

Figures with an example of the header and data from these file formats are included. In addition to the example figures, there exist tables describing the header, data, and termination lines for each source that uses the MDTF. Each table contains the following fields: "Field," "Columns," "Contents," "Field Definition," "Units," and "Format Read Statement." "Field" uses a combination of alphabetical and numerical characters to define the order of each field and the line number of the variable, respectively. For example, the termination altitude of the TDRWP is listed as B250, meaning the termination altitude is the second field on the 250th line of the file. "Columns" lists the exact columns that contain the values. The column characters are inclusive and begin with 1. "Contents" gives an example of what each character of the field contains. If the field is an unchanging string, such as a header descriptor, that string is provided in single quotations. If the field is a variable integer or float the potential characters are listed as an X, and the placement of the decimal is used to illustrate the precision of the floating value. "Field Definition" provides a description for each field. "Units" provides the units used by each field variable. "Format Read Statement" provides the Python formatted read statement for each field.

These tables only include the sources supported by MDTF. The parent documentation for MDTF, JSC-22955 Rev B, has been retired. Further information on all other formats, such as the formats used by MERLIN and the LPLWS, can be found on the KSC Weather Archive webpage. All figures in this document have had data removed for brevity. Ellipses are used to indicate where data were removed.

3.1 WINDS Tower, including LC-39B Met Instrumentation

The WINDS Towers data are disseminated through the Meteorological Interactive Data Display System (MIDDS) and the Range External Interface Network (REIN) in the tower-specific MDTF. WINDS tower data are collected in one and five minute intervals, where each interval has an average and peak wind speed and respective wind direction. In both the one- and five-minute interval data files, the peak wind speed and respective direction from the past ten minutes is included. The first line of the header contains the file name, which consists of location, day of the year, and transmit time of the file. Each line of data after the header is an individual height from a tower. For instance, Tower 108 has three altitudes at which data are recorded, so there exist three lines of data for Tower 108. The last line of the file is a file termination flag. Each line also has an 80-character limit. These files are created and disseminated every minute for one-minute WINDS intervals, and once every five minutes for five-minute WINDS intervals. In Figure 1 and other figures that show data in specified formats, the ellipsis is used to indicate that data have been removed for brevity.

```
WT012722020
CCAFS/KSC WIND TOWER DATA      2020Z  29 SEP 15
                     01 MIN  01 MIN  10 MIN
                     AVERAGE PEAK    PEAK                    TMP
TOWER        HGT AV DIR SPD DIR SPD DIR SPD DEV   TMP    DIF     DP  RH     PRE
             FT MIN DEG KTS DEG KTS DEG KTS DEG     F      F      F   %      MB
39 B NW      457 01 172  12 173  13 173  13 007  77.3         74.4  91
39 B NW      458 01 159  10 152  11 160  13 007  77.8         74.3  89
39 B NW      459 01 185   2 190   7 194  10 021  78.0         73.9  87
39 B NW      382 01 174  12 173  13 173  13 007  77.8         72.3  83
39 B NW      383 01 156  10 160  12 162  13 007  78.0         75.4  92
39 B NW      384 01 164   6 172   9 181  11 009  78.1         74.9  90
39 B NW      257 01 168  12 167  13 167  13 008  78.7         74.7  87
39 B NW      258 01 154  10 154  12 158  12 008  78.5         75.2  89
39 B NW      259 01 164   6 159   8 173  10 008  78.7         74.2  86
39 B NW      132 01 170  11 170  13 170  13 007  79.3         76.1  90
39 B NW      133 01 151  10 149  11 155  11 008  79.5         75.5  87
39 B NW      134 01 160   7 157   9 157  10 006  79.0         75.6  89
0108          54 01 166   6 167   8 167   9 012  79.6  -0.6
0108          12 01 149   3 151   6 154   7 022
0108          06 01                               80.2
...
NNNN
```

Figure 1: Example of WINDS MDTF

The tables below include the wind tower MDTF header and data formats. The Field Number shows the order of the field with an alphabetical character followed by the line number. Even though each line number in Table 3 is listed as seven, the data formats are repeated for each line of data for each tower. The wind tower MDTF end of file flag is 'NNNN'.

Table 2: Wind Tower MDTF of Header Data

Field #	Columns	Contents	Field Definition	Units	Format Read Statement
A1	1-2	'WT'	Wind tower identifier	N/A	'%2s'
B1	3-4	XX	Wind tower location identifier	N/A	'%2s'
C1	5-7	XXX	Day of the year	Day of the year	'%3d'
D1	8-11	XXXX	Time, hour and minute	Time, military	'%4s'
A2	1-9	'CCAFS/KSC'	Location identifier	N/A	'%9s'
B2	11-25	'WIND TOWER DATA'	Data source identifier	N/A	'%15s'
C2	31-34	XXXX	Observation time	Time, Hour and minute	'%4s'
D2	35	'Z'	Zulu time unit	N/A	'%1s'
E2	38-39	XX	Day of month	Day of month	'%2d'
F2	41-43	XXX	Month, abbreviated to three letters	Month	'%3s'
G2	45-46	XX	Last two digits of year	Year	'%2d'
A3	20-21	XX	Minute interval for averaged values	Minutes	'%2d'
B3	22-25	'MIN'	Minute unit identifier	N/A	'%3s'
C3	28-29	XX	Minute interval for peak values	Minutes	'%2d'
D3	31-33	'MIN'	Minute unit identifier	N/A	'%3s'
E3	36-41	'10 MIN'	Peak ten minute interval identifier	N/A	'%6s'
A4	20-26	'AVERAGE'	Identifier for averaged minute interval values	N/A	'%7s'
B4	28-31	'PEAK'	Identifier for peak minute interval values	N/A	'%4s'
C4	36-39	'PEAK'	Identifier for peak values from the last ten minutes	N/A	'%4s'
D4	56-58	'TMP'	Temperature difference identifier	N/A	'%3s'
A5	1-5	'TOWER'	Tower identifier	N/A	'%5s'
B5	13-15	'HGT'	Height identifier	N/A	'%3s'
C5	17-18	'AV'	Minute interval identifier	N/A	'%2s'
D5	20-22	'DIR'	Minute interval average wind direction identifier	N/A	'%3s'
E5	24-26	'SPD'	Minute interval average wind speed identifier	N/A	'%3s'
F5	28-30	'DIR'	Minute interval peak wind direction identifier	N/A	'%3s'

G5	32-34	'SPD'	Minute interval peak wind speed identifier	N/A	'%3s'
H5	36-38	'DIR'	Peak ten minute wind direction identifier	N/A	'%3s'
I5	40-42	'SPD'	Peak ten minute wind speed identifier	N/A	'%3s'
J5	44-46	'DEV'	Directional deviation identifier	N/A	'%3s'
K5	50-52	'TMP'	Temperature identifier	N/A	'%3s'
L5	56-58	'DIF'	Temperature difference identifier	N/A	'%3s'
M5	63-64	'DP'	Dew point identifier	N/A	'%2s'
N5	67-68	'RH'	Relative humidity identifier	N/A	'%2s'
O5	73-75	'PRE'	Pressure identifier	N/A	'%3s'
A6	13-14	'FT'	Height unit identifier	N/A	'%2s'
B6	16-18	'MIN'	Minute interval unit identifier	N/A	'%3s'
C6	20-22	'DEG'	Minute interval average wind direction unit identifier	N/A	'%3s'
D6	24-26	'KTS'	Minute interval average wind speed unit identifier	N/A	'%3s'
E6	28-30	'DEG'	Minute interval peak wind direction unit identifier	N/A	'%3s'
F6	32-34	'KTS'	Minute interval peak wind speed unit identifier	N/A	'%3s'
G6	36-38	'DEG'	Peak ten minute wind direction unit identifier	N/A	'%3s'
H6	40-42	'KTS'	Peak ten minute wind speed unit identifier	N/A	'%3s'
I6	44-46	'DEG'	Directional deviation unit identifier	N/A	'%3s'
J6	52	'F'	Temperature unit identifier	N/A	'%1s'
K6	58	'F'	Temperature difference unit identifier	N/A	'%1s'
L6	64	'F'	Dew point unit identifier	N/A	'%1s'
M6	68	'%'	Relative humidity unit identifier	N/A	'%1s'
N6	74-75	'MB'	Pressure unit identifier	N/A	'%2s'

Table 3: Wind Tower MDTF of Data

Field #	Columns	Contents	Field Definition	Units	Format Read Statement
A7	1-7	XXXXXXX	Tower ID	N/A	'%7s'
B7	10-11	XX	Tower side	N/A	'%2'
C7	13-15	XXX	Height of sensor	Feet	'%3d'
D7	17-18	XX	Minute averaging interval	Minutes	'%2d'
E7	20-22	XXX	Average wind direction	Degrees	'%3d'
F7	24-26	XXX	Average wind speed	Knots	'%3d'
G7	28-30	XXX	Peak wind direction	Degrees	'%3d'
H7	32-34	XXX	Peak wind speed	Knots	'%3d'
I7	36-38	XXX	Ten minute peak wind direction	Degrees	'%3d'
J7	40-42	XXX	Ten minute peak wind speed	Knots	'%3d'
K7	44-46	XXX	Directional Deviation	Degrees	'%3d'
L7	48-52	XXX.X	Temperature	Fahrenheit	'%5.1f'
M7	54-58	XXX.X	Temperature Difference	Fahrenheit	'%5.1f'
N7	60-64	XXX.X	Dew point	Fahrenheit	'%5.1f'
O7	66-68	XXX	Relative humidity	Percent	'%3d'
P7	70-75	XXXX.X	Surface pressure	Millibars	'%6.1f'

3.2 KSC TDRWP

The TDRWP data are disseminated through the MIDDS and the REIN in the profiler-specific MDTF. The MDTF was developed for the previous system, the 50-MHz DRWP, thus the data fields were written to accommodate a three-beam configuration; North, East, and Vertical. The TDRWP currently operates in a four beam configuration so the values for vertical velocity, signal power, noise level, and spectrum width are averaged to fit the profiler MDTF. Oblique beam fields (S1, S2, N1, N2, WID1, WID2) represent opposing-beam averages and vertical beam fields (S3, N3, WID3) represent the average over all four beams. Additionally, WW represents the average up/down component of all beams' radial velocities. Fields G1 and G2 contain the maximum first-guess propagation from opposing beams. As with the other MDTF files, there exists an 80-character limit to each line. The first line of the header contains the file name, which consists of location, day of the year, and transmit time of the file. The footer of the file contains metadata regarding the condition of the radar. The last line of the file is a file termination flag.

```
PS072731210
TEST NBR 02015
PROFILER DATA
KENNEDY SPACE CENTER, FL.
1209Z  30 SEP 15

  ALT   DIR    SPD  SHR    WW    S1    S2    S3    N1    N2    N3    WID1 WID2 WID3 G G QC

 GEOM   DEG    M/S /SEC    M/S   DB    DB    DB    DB    DB    DB    M/S  M/S  M/S  1 2 NN


  1798 234   14.0 .000  -0.12111.5109.9110.8 62.0 62.6 62.3  0.8  0.5 0.64 0 0 64

  1948 233   14.0 .001  -0.06115.0114.6114.8 62.1 62.7 62.4  0.9  0.5 0.70 0 0 64

  2098 238   14.3 .008  -0.19117.7117.3117.5 60.5 61.2 60.9  0.9  0.5 0.68 0 0 64

...

TERMINATION        19465
135.0  45.0   0.0 75.7 75.7 90.04096   30   30   30  3  3  3 153.8 153.8 153.8
150 150 150 150 150 150 640   0   250  20  3038    0    0   0  47 4 0  5
3 3 3 0 0 5
103 103
NNNN
```

Figure 2: Example of TDRWP MDTF

The TDRWP and AMPS Flight Elements all have uniform headers that include location, date, and time information. The table for the fixed header is included below, as well as the tables describing the MDTF format for the TDRWP header, data, and termination fields. The format in the TDRWP Data format table is repeated for each altitude of a profile generated by the TDRWP. Under nominal conditions, the TDRWP generates 119 gates of data resulting in this data format being repeated for each gate.

Table 4: Fixed AMPS Flight Element and TDRWP Header MDTF

Field #	Columns	Contents	Field Definition	Units	Format Read Statement
A1	1-2	XX	Equipment Type	N/A	'%2s'
B1	3-4	XX	Site Identification Code	N/A	'%2s'
C1	4-7	XXX	Julian data of file creation	Day of year	'%3s'
D1	8-11	XXXX	Zulu time of file	Hour and minute	'%4s'
A2	1-8	TEST NBR	Test Number Identifier	N/A	'%8s'
B2	10-14	XXXXX	Test Number	N/A	%5s'
A3	1-80	String varies in length	Measuring equipment header	N/A	'%80s'
A4	1-80	String varies in length	Measuring site location	N/A	'%80s'
A5	1-4	XXXX	Zulu time of balloon launch or initial measurement	Hour and minute	'%4s'
B5	5	Z	Indicates Zulu	N/A	'%1s'
C5	8-9	XX	Day of month	Day of month	'%2s'
D5	11-13	XXX	Abbreviated month	Month	'%3s'
E5	15-16	XX	Last two numbers in year	Year	'%6.2f'

Table 5: TDRWP Specific MDTF Header Format

Field #	Columns	Contents	Field Definition	Units	Format Read Statement
A6			Blank line		
A7	3-5	'ALT'	Altitude identifier	N/A	'%3s'
B7	8-10	'DIR'	Wind direction identifier	N/A	'%3s'
C7	14-16	'SPD'	Wind speed identifier	N/A	'%3s'
D7	19-21	'SHR'	Shear identifier	N/A	'%3s'
E7	25-26	'WW'	Radial velocity (vertical) identifier	N/A	'%2s'
F7	30-31	'S1'	Signal power of East beam identifier	N/A	'%2s'
G7	35-36	'S2'	Signal power of North beam identifier	N/A	'%2s'
H7	40-41	'S3'	Signal power of vertical beam identifier	N/A	'%2s'
I7	45-46	'N1'	Noise level of East beam identifier	N/A	'%2s'
J7	50-51	'N2'	Noise level of North beam identifier	N/A	'%2s'
K7	55-56	'N3'	Noise level of Vertical beam identifier	N/A	'%2s'
L7	60-63	'WID1'	Spectral Width of East beam identifier	N/A	'%4s'
M7	65-68	'WID2'	Spectral Width of North beam identifier	N/A	'%4s'
N7	70-73	'WID3'	Spectral Width of Vertical beam identifier	N/A	'%4s'
O7	75	'G'	First guess propagation of East beam	N/A	'%1s'
P7	77	'G'	First guess propagation of North beam	N/A	'%1s'
Q7	79-80	'QC'	Wind vector error estimate	N/A	'%2s'
A8			Blank line		
A9	2-5	'GEOM'	Geometric altitude unit identifier	N/A	'%4s'
B9	8-10	'DEG'	Wind direction unit identifier	N/A	'%3s'
C9	14-16	'M/S'	Wind speed unit identifier	N/A	'%3s'
D9	18-21	'/SEC'	Shear unit identifier	N/A	'%4s'
E9	25-27	'M/S'	Radial velocity unit identifier	N/A	'%3s'
F9	30-31	'DB'	Signal power of East beam unit identifier	N/A	'%2s'
G9	35-36	'DB'	Signal power of North beam unit identifier	N/A	'%2s'
H9	40-41	'DB'	Signal power of Vertical beam unit identifier	N/A	'%2s'
I9	45-46	'DB'	Noise level of East beam unit identifier	N/A	'%2s'
J9	50-51	'DB'	Noise level of North beam unit identifier	N/A	'%2s'
K9	55-56	'DB'	Noise level of Vertical beam unit identifier	N/A	'%2s'
L9	60-62	'M/S'	Spectral Width of East beam unit identifier	N/A	'%3s'
M9	65-67	'M/S'	Spectral Width of North beam unit identifier	N/A	'%3s'

N9	70-72	'M/S'	Spectral Width of Vertical beam unit identifier	N/A	'%3s'
O9	75	'1'	First guess propagation of East beam identifier	N/A	'%1s'
P9	77	'2'	First guess propagation of East beam identifier	N/A	'%1s'
Q9	79-80	'NN'	Wind vector error estimate identifier	N/A	'%2s'
A10	Blank line				
A11	Blank line				

Table 6: TDRWP MDTF of Data

Field		Contents	Field Definition	Units	Format Read
A12	1-6	XXXXXX	Geometric altitude	Meters	'%6d'
B12	8-10	XXX	Wind direction	Degrees	'%3d'
C12	12-16	XXX.X	Wind speed	Meters per	'%5.1f'
D12	18-21	.XXX	Shear	Seconds^{-1}	'%4.3f'
E12	23-28	-XX.XX	Radial velocity from vertical beam	Meters per second	'%5.2f'
F12	29-33	XXX.X	Signal power from East beam	Decibels	'%5.1f'
G12	34-38	XXX.X	Signal power from North beam	Decibels	'%5.1f'
H12	39-43	XXX.X	Signal power from Vertical	Decibels	'%5.1f'
I12	44-48	XXX.X	Noise level from East beam	Decibels	'%5.1f'
J12	49-53	XXX.X	Noise level from North beam	Decibels	'%5.1f'
K12	54-58	XXX.X	Noise level from Vertical beam	Decibels	'%5.1f'
L12	59-63	XXX.X	Spectral width from East beam	Meters per second	'%5.1f'
M12	64-68	XXX.X	Spectral width from North beam	Meters per second	'%5.1f'
N12	69-73	XXX.X	Spectral width from Vertical beam	Meters per second	'%5.1f'
O12	74-75	XXX	First guess propagation of East beam	N/A	'%3d'
P12	76-77	XXX	First guess propagation of North beam	N/A	'%3d'
Q12	78-80	XXX	Wind vector error estimate	Meters per second	'%3d'

Table 7: TDRWP MDTF of Termination and Meta Data

Field #	Columns	Contents	Field Definition	Units	Format Read Statement
A250	1-11	'TERMINATION'	Termination identifier	N/A	'%11s'
B250	18-23	XXXXXX	Termination altitude	Meters	'%6d'
A251	1-5	XXX.X	East beam azimuth	Degrees	'%5.1f'
B251	7-11	XXX.X	North beam azimuth	Degrees	'%5.1f'
C251	13-17	XXX.X	Vertical beam azimuth	Degrees	'%5.1f'
D251	19-22	XX.X	East beam elevation	Degrees	'%4.1f'
E251	24-27	XX.X	North beam elevation	Degrees	'%4.1f'
F251	29-32	XX.X	Vertical beam elevation	Degrees	'%4.1f'
G251	34-36	XXX	First Fourier Transformation points	N/A	'%3d'
H251	38-41	XXXX	Number of time domain averages of East beam	N/A	'%4d'
I251	43-46	XXXX	Number of time domain averages of North beam	N/A	'%4d'
J251	48-51	XXXX	Number of time domain averages of Vertical beam	N/A	'%4d'
K251	53-54	XX	Number of spectral averages of East beam	N/A	'%2d'
L251	56-57	XX	Number of spectral averages of North beam	N/A	'%2d'
M251	59-60	XX	Number of spectral averages of Vertical beam	N/A	'%2d'
N251	62-66	XXX.X	Pulse repetition period of East beam	Microsecond	'%5.1f'
O251	68-72	XXX.X	Pulse repetition period of North beam	Microsecond	'%5.1f'
P251	74-78	XXX.X	Pulse repetition period of Vertical beam	Microsecond	'%5.1f'
A252	1-3	XXX	Vertical gate spacing of East beam	Meters	'%3d'
B252	5-7	XXX	Vertical gate spacing of North beam	Meters	'%3d'
C252	9-11	XXX	Vertical gate spacing of Vertical beam	Meters	'%3d'
D252	13-15	XXX	Vertical gate width of East beam	Meters	'%3d'
E252	17-19	XXX	Vertical gate width of North beam	Meters	'%3d'
F252	21-23	XXX	Vertical gate width of Vertical beam	Meters	'%3d'
G252	25-27	XXX	Maximum AC voltage	Volts	'%3d'
H252	29-31	XXX	Minimum AC voltage	Volts	'%3d'

I252	33-37	XXXXX	Transmitted power	Kilowatts	'%5d'
J252	39-41	XXX	Noise temperature, estimated	Kelvin	'%3d'
K252	43-47	XXXXX	Reflected power	Watts	'%5d'
L252	49-52	XXXX	Driver output power	Watts	'%4d'
M252	54-57	XXXX	Driver input power	Watts	'%4d'
N252	59-61	XXX	Transmitter temperature	Kelvin	'%3d'
O252	63-65	XXX	Enclosure temperature	Kelvin	'%3d'
P252	67	X	Flood alarm	N/A	'%1d'
Q252	69	X	Access alarm	N/A	'%1d'
R252	71-72	XX	Code bits	N/A	'%2d'
A253	1	X	Temporal median filter code of East beam	N/A	'%1d'
B253	3	X	Temporal median filter code of North beam	N/A	'%1d'
C253	5	X	Temporal median filter code of Vertical beam	N/A	'%1d'
D253	7	X	Running mean code of East beam	N/A	'%1d'
E253	9	X	Running mean code of North beam	N/A	'%1d'
F253	11	X	Running mean code of Vertical beam	N/A	'%1d'
A254	1-3	XXX	Check sum total	N/A	'%3d'
B254	5-7	XXX	Check sum total repeated	N/A	'%3d'
A255	1-4	'NNNN'	End of file flag	N/A	'%4s'

3.3 915-MHz DRWP

The 915-MHz DRWPs data are disseminated through the MIDDS and the REIN in the DRWP-specific MDTF. Unlike the WINDS and TDRWP MDTF files, there exists no explanatory text for the data within the header of the file. Also, due to the 80-character line limitations, a single record of data from a range gate is recorded over two lines. The first line of the file contains the file name. The first line of the header contains the identifier for the specific DRWP. The data lines include fields for an optional five-beam configuration. A termination flag is given on the last line of every DRWP within the file.

```
RW012722116

RWP0001
28.40   80.60     3
15  09  29  21  16  00    0
 14
 10   10    9    0    0    6    6    6    0    0    2.00    2.00    3.00    0.00
    0.00
 170   170   42   42  1400  1400    47    47
 10.3   10.3  1   2100   2100   60   60   700   700
 91    1    0    0   75   75    0    0
 0.130     5.9   181     0.00    0.00   -1.50    9999    9999    9    10    10
9999  9999    13    11    15  9999  9999
 0.231     6.1   187     0.00   -0.10   -1.60    9999    9999    9    10    10
9999  9999    12    12    15  9999  9999
 0.332     6.3   192     0.10   -0.30   -1.60    9999    9999    9    10    10
9999  9999     9     9    12  9999  9999
...

NNNN
```

Figure 3: Example of 915-MHz DRWP MDTF

The tables below include the 915-MHz DRWP MDTF header, data, and termination formats. During the creation of many of the data formats, an 80-character limit per line was implemented due to the size of the computer monitors restricting the number characters per line. Due to the 80-character line limitations, the data format requires a single altitude's data be recorded over two lines. The two lines in the data format table are repeated for each of the 60 altitudes of the 915-MHz DRWP. Data from each of the five 915-MHz DRWPs at the ER is recorded in this format.

Table 8: 915-MHz DRWP MDTF of Header Data

Field #	Columns	Contents	Field Definition	Units	Format Read Statement
A1	1-2	'RW'	DRWP two letter identifier	N/A	'%2s'
B1	3-4	XX	Location code	N/A	'%2s'
C1	5-7	XXX	Day of year	Day of year	'%3d'
D1	8-11	XXXX	Time (HHMM)	Hour and	'%4s'
A2			Blank Line		
A3	1-7	XXXXXXX	DRWP Identifier	N/A	'%8s'
A4	1-5	XX.XX	Latitude of DRWP	Degree	'%5.2f'
B4	8-12	XXX.XX	Longitude of DRWP	Degree	'%6.2f'
C4	14-17	XXXX	Altitude above sea level	Meters	'%4d'
A5	1-2	XX	Consensus year	Last two digits of year	'%2d'
B5	5-6	XX	Consensus month	Month in two	'%2d'
C5	9-10	XX	Consensus day	Day of month	'%2d'
D5	13-14	XX	Consensus hour	Hours	'%2s'
E5	17-18	XX	Consensus minute	Minutes	'%2s'
F5	25-27	XXX	Number of minutes difference from Zulu time	Minutes	'%3d'
A6	1-3	XXX	Consensus averaging time period	Minutes	'%3d'
A7	1-3	XXX	Total number of records for beam #1	N/A	'%3d'
B7	6-8	XXX	Total number of records for beam #2	N/A	'%3d'
C7	11-13	XXX	Total number of records for beam #3	N/A	'%3d'
D7	16-18	XXX	Total number of records for beam #4	N/A	'%3d'
E7	21-23	XXX	Total number of records for beam #5	N/A	'%3d'
F7	26-28	XXX	Total number of records required to meet consensus for beam #1	N/A	'%3d'
G7	31-33	XXX	Total number of records required to meet consensus for beam #2	N/A	'%3d'
H7	36-38	XXX	Total number of records required to meet consensus for beam #3	N/A	'%3d'
I7	41-43	XXX	Total number of records required to meet consensus for beam #4	N/A	'%3d'
J7	46-48	XXX	Total number of records required to meet consensus for beam #5	N/A	'%3d'
K7	51-56	XXX.XX	Range where samples must fall to be acceptable for beam #1	N/A	'%6.2f'
L7	59-64	XXX.XX	Range where samples must fall to be acceptable for beam #2	N/A	'%6.2f'
M7	67-72	XXX.XX	Range where samples must fall to be acceptable for beam #3	N/A	'%6.2f'

N7	75-80	XXX.XX	Range where samples must fall to be acceptable for beam #4	N/A	'%6.2f'
A8	3-8	XXX.XX	Range where samples must fall to be acceptable for beam #5	N/A	'%6.2f'
A9	1-4	XXXX	Number of coherent integrations (oblique)	N/A	'%4d'
B9	7-10	XXXX	Number of coherent integrations (vertical)	N/A	'%4d'
C9	13-15	XXX	Number of spectral averages (oblique)	N/A	'%3d'
D9	18-20	XXX	Number of spectral averages (vertical)	N/A	'%3d'
E9	23-26	XXXX	Pulse width (oblique)	Nanoseconds	'%4d'
F9	29-32	XXXX	Pulse width (vertical)	Nanoseconds	'%4d'
G9	35-38	XXXX	Inter-pulse period (oblique)	Microseconds	'%4d'
H9	41-44	XXXX	Inter-pulse period (vertical)	Microseconds	'%4d'
A10	1-5	XXX.X	Full scale Nyquist Doppler velocity (oblique)	Meters per second	'%5.1f'
B10	8-12	XXX.X	Full scale Nyquist Doppler velocity (vertical)	Meters per second	'%5.1f'
C10	15	X	Correction indicator	N/A	'%1d'
D10	18-22	XXXXX	Delay in getting to first range gate (oblique)	Nanoseconds	'%5d'
E10	25-29	XXXXX	Delay in getting to first range gate (vertical)	Nanoseconds	'%5d'
F10	32-34	XXX	Number of range gates (oblique)	N/A	'%3d'
G10	37-39	XXX	Number of range gates (vertical)	N/A	'%3d'
H10	42-45	XXXX	Range gate spacing (oblique)	Nanoseconds	'%4d'
I10	48-51	XXXX	Range gate spacing (vertical)	Nanoseconds	'%4d'
A11	1-3	XXX	Azimuth of oblique beam #1	Degrees	'%3d'
B11	6-8	XXX	Azimuth of oblique beam #2	Degrees	'%3d'
C11	11-13	XXX	Azimuth of oblique beam #3	Degrees	'%3d'
D11	16-18	XXX	Azimuth of oblique beam #4	Degrees	'%3d'
E11	21-23	XXX	Elevation of oblique beam #1	Degrees	'%3d'
F11	26-28	XXX	Elevation of oblique beam #2	Degrees	'%3d'
G11	31-33	XXX	Elevation of oblique beam #3	Degrees	'%3d'
H11	36-38	XXX	Elevation of oblique beam #4	Degrees	'%3d'

Table 9: 915-MHz DRWP MDTF of Data

Field #	Columns	Contents	Field Definition	Units	Format Read Statement
A12	1-6	XX.XXX	Altitude	Kilometers	'%6.3f'
B12	9-14	XXXX.X	Wind speed	Meters per second	'%6.1f'
C12	17-19	XXX	Wind direction	Degrees	'%3d'
D12	22-28	XXXX.XX	Radial velocity for beam #1	Meters per second	'%7.2f'
E12	30-36	XXXX.XX	Radial velocity for beam #2	Meters per second	'%7.2f'
F12	38-44	XXXX.XX	Radial velocity for beam #3	Meters per second	'%7.2f'
G12	46-52	XXXX.XX	Radial velocity for beam #4	Meters per second	'%7.2f'
H12	54-60	XXXX.XX	Radial velocity for beam #5	Meters per second	'%7.2f'
I12	62-65	XXXX	Number of records in consensus for beam #1	N/A	'%4d'
J12	67-70	XXXX	Number of records in consensus for beam #2	N/A	'%4d'
K12	72-75	XXXX	Number of records in consensus for beam #3	N/A	'%4d'
A13	1-4	XXXX	Number of records in consensus for beam #4	N/A	'%4d'
B13	7-10	XXXX	Number of records in consensus for beam #5	N/A	'%4d'
C13	13-16	XXXX	Signal to noise ratio for beam #1	Decibels	'%4d'
D13	19-22	XXXX	Signal to noise ratio for beam #2	Decibels	'%4d'
E13	25-28	XXXX	Signal to noise ratio for beam #3	Decibels	'%4d'
F13	31-34	XXXX	Signal to noise ratio for beam #4	Decibels	'%4d'
G13	37-40	XXXX	Signal to noise ratio for beam #5	Decibels	'%4d'

Table 10: 915-MHz DRWP MDTF of Termination Flag

Field #	Columns	Contents	Field Definition	Units	Format Read Statement
A132	1-4	'NNNN'	Termination flag	N/A	'%4d'

3.4 AMPS Flight Elements

The LRFEs are used in both launch support and meteorological forecasts. The LRFE data are recorded in the MDTF which has the data in either 100 foot or 1,000 foot increments. In support of the meteorological forecasts, additional altitudes are included in the file. These altitudes are listed as either mandatory or significant levels, resulting in three separate sections of data within a LRFE file. The name of the file is the first line of the file, followed by a header and the three data sections. The interpolated data section and the significant sections have termination flags. Like the other MDTF files, each line has an 80-character limit.

```
LR012722350
TEST NBR I8129 2ND RELEASE
RAWINSONDE AMP/LR
CAPE CANAVERAL AFS, FLORIDA
2350Z  29 SEP 15

  ALT  DIR   SPD  SHR  TEMP  DPT   PRESS   RH ABHUM DENSITY I/R V/S  VPS  PW
GEOMFT DEG   KTS /SEC DEG C DEG C   MBS   PCT  G/M3   G/M3   N  KTS  MBS  MM

    16 210   4.0 .000  27.5  25.9 1008.80  91 24.09 1154.28 398 680 33.42  0
  1000 246  16.4 .023  25.3  22.0  975.32  82 19.16 1126.81 364 677 26.39  6
  2000 270  15.6 .011  23.2  20.9  942.16  87 18.03 1096.59 351 674 24.66 12
  3000 276  16.8 .004  21.3  19.6  909.92  90 16.84 1066.31 338 672 22.88 17
...
TERMINATION       24934 GEOPFT   7600 GEOPM  400.8 MBS
TROPOPAUSE       0  FEET      .00 MB     .0 C     .0 C

MANDATORY LEVELS
GEOPFT DIR KTS  TEMP   DPT PRESS   RH

   272 222  12  27.0  23.4 1000.0  81
  1758 264  14  23.7  21.2  950.0  86
  2525 271  15  22.2  20.1  925.0  88
...
SIGNIFICANT LEVELS
GEOMFT DIR KTS  TEMP   DPT PRESS   IR  RH

    16 210   4  27.5  25.9 1008.8 398  91
   300 223  13  27.0  23.3  999.0 377  80
  3700 288  17  19.7  18.6  887.9 329  94
...
TERMINATION
034 034
```

Figure 4: Example of LRFE MDTF

Tables 11-18 include the LRFE MDTF data levels header, data, data levels termination records, mandatory levels header, mandatory levels data, significant levels header, significant levels data, and the file termination data formats. The number of data, mandatory, and significant levels is dependent upon the termination altitude of the balloon, thus the line number in Tables 12,

13, 15, and 17 is relative to each section, not the line number in the file. Furthermore, the format for the data, mandatory, and significant levels is repeated for every altitude.

Table 11: LRFE MDTF of Data Header

Field #	Columns	Contents	Field Definition	Units	Format Read
A6	Blank Line				
A7	3-5	'ALT'	Altitude of measurements	N/A	'%3s'
B7	8-10	'DIR'	Wind direction	N/A	'%3s'
C7	14-16	'SPD'	Wind speed	N/A	'%3s'
D7	19-21	'SHR'	Shear	N/A	'%3s'
E7	24-27	'TEMP'	Temperature	N/A	'%4s'
F7	30-32	'DPT'	Dew point temperature	N/A	'%3s'
G7	36-40	'PRESS'	Pressure	N/A	'%5s'
H7	44-45	'RH'	Relative humidity	N/A	'%2s'
I7	47-51	'ABHUM'	Absolute humidity	N/A	'%5s'
J7	53-59	'DENSITY'	Density	N/A	'%7s'
K7	61-63	'I\R'	Index of refraction	N/A	'%3s'
L7	65-67	'V\S'	Speed of sound	N/A	'%3s'
M7	70-72	'VPS'	Vapor pressure	N/A	'%3s'
N7	75-76	'PW'	Precipitable water	N/A	'%2s'
A8	1-6	'AGL'	Altitude unit identifier	N/A	'%6s'
B8	8-10	'DEG'	Wind direction unit identifier	N/A	'%3s'
C8	14-16	'KTS'	Wind speed unit identifier	N/A	'%3s'
D8	18-21	'/SEC'	Shear unit identifier	N/A	'%4s'
E8	23-27	'DEG C'	Temperature unit identifier	N/A	'%5s'
F8	29-33	'DEG C'	Dew Point unit identifier	N/A	'%5s'
G8	37-39	'MBS'	Pressure unit identifier	N/A	'%3s'
H8	43-45	'PCT'	Relative humidity unit identifier	N/A	'%3s'
I8	48-51	'G/M3'	Absolute humidity unit identifier	N/A	'%4s'
J8	55-58	'G/M3'	Density unit identifier	N/A	'%4s'
K8	62	'N'	Index of refraction unit identifier	N/A	'%1s'
L8	65-67	'KTS'	Speed of sound unit identifier	N/A	'%3s'
M8	70-72	'MBS'	Vapor pressure unit identifier	N/A	'%3s'
N8	75-76	'MM'	Precipitable water unit identifier	N/A	'%2s'
A9	Blank Line				

Table 12: LRFE MDTF of Data

Field #	Columns	Contents	Field Definition	Units	Format Read Statement
A10	1-6	XXXXXX	Altitude	MSL Feet	'%6d'
B10	8-10	XXX	Wind direction	Degrees	'%4d'
C10	12-16	XXX.X	Wind speed	Knots	'%6.1f'
D10	18-21	.XXX	Shear	Seconds^{-1}	'%5.3f'
E10	23-27	XXX.X	Temperature	Celsius	'%6.1f'
F10	29-33	XXX.X	Dew point	Celsius	%6.1f'
G10	35-41	XXXX.XX	Pressure	Millibars	'%8.2f'
H10	43-45	XXX	Relative humidity	Percent	'%4d'
I10	47-51	XX.XX	Absolute humidity	Grams per meter^3	'%6.2f'
J10	53-59	XXXX.XX	Density	Grams per meter^3	'%8.2f'
K10	61-63	XXX	Index of Refraction	Index	'%4d'
L10	65-67	XXX	Velocity of sound	N	'%4d'
M10	69-73	XX.XX	Vapor pressure	Millibars	'%6.2f'
N10	75-76	XX	Precipitable water	Millimeters	'%3d'

Table 13: LRFE MDTF of Data Termination Records

Field #	Columns	Contents	Field Definition	Units	Format Read Statement
A1	1-11	'TERMINATION'	Termination unit identifier	N/A	'%12s'
B1	18-23	XXXXXX	Termination altitude	Feet	'%6d'
C1	25-30	'GEOPFT'	Geopotential altitude unit identifier	N/A	'%6s'
D1	32-37	XXXXXX	Geopotential altitude in meters	Meters	'%6d'
E1	39-43	'GEOPM'	Geopotential altitude (millibars) identifier	N/A	'%5s'
F1	45-50	XXXX.X	Geopotential altitude in Millibars	Millibars	'%6.1f'
G1	52-54	'MBS'	Millibar unit identifier	N/A	'%3s'
A2	1-10	'TROPOPAUSE'	Tropopause identifier	N/A	'%11s'
B2	13-18	XXXXXX	Tropopause altitude in feet	Feet	'%6d'
C2	21-24	'FEET'	Feet unit identifier	N/A	'%4s'
D2	27-33	XXXX.XX	Tropopause in millibars	Millibars	'%7.2f'
E2	35-36	'MB'	Millibar unit identifier	N/A	'%2s'
F2	39-43	XXX.X	Tropopause temperature	Celsius	'$5.1f'
G2	45	'C'	Temperature unit identifier	N/A	'%1s'
H2	48-52	XXX.X	Tropopause dew point	Celsius	'%5.1f'
I2	54	'C'	Dew Point unit identifier	N/A	'%1s'
A3	Blank Line				

Table 14: LRFE MDTF of Mandatory Levels Header Data

Field #	Columns	Contents	Field Definition	Units	Format Read Statement
A1	1-16	'MANDATORY LEVELS'	Mandatory Levels identifier	N/A	'%17s'
A2	1-6	'GEOPFT'	Geopotential altitude unit identifier	N/A	'%7s'
B2	8-10	'DIR'	Wind direction unit identifier	N/A	'%3s'
C2	12-14	'KTS'	Wind Speed unit identifier	N/A	'%3s'
D2	17-20	'TEMP'	Temperature unit identifier	N/A	'%4s'
E2	24-26	'DPT'	Dew Point unit identifier	N/A	'%3s'
F2	28-32	'PRESS'	Pressure unit identifier	N/A	'%5s'
G2	36-37	'RH'	Relative Humidity identifier	N/A	'%2s'
A3	Blank line				

Table 15: LRFE MDTF of Mandatory Levels Data

Field #	Columns	Contents	Field Definition	Units	Format Read Statement
A4	1-6	XXXXXX	Mandatory altitude	MSL Feet	'%6d'
B4	8-10	XXX	Wind direction	Degrees	'%3d'
C4	1214	XXX	Wind speed	Knots	'%3d'
D4	16-20	XXX.X	Temperature	Celsius	'%5.1f'
E4	22-26	XXX.X	Dew Point	Celsius	'%5.1f'
F4	28-33	XXXX.X	Pressure	Millibars	'%6.1f'
G4	35-37	XXX	Relative humidity	Percent	'%3d'

Table 16: LRFE MDTF of Significant Levels Header Data

Field #	Columns	Contents	Field Definition	Units	Format Read Statement
A1	1-16	'SIGNIFICANT LEVELS'	Mandatory Levels identifier	N/A	'%17s'
A2	1-6	'GEOMFT'	Geopotential altitude unit identifier	N/A	'%7s'
B2	8-10	'DIR'	Wind direction unit identifier	N/A	'%3s'
C2	12-14	'KTS'	Wind Speed unit identifier	N/A	'%3s'
D2	17-20	'TEMP'	Temperature unit identifier	N/A	'%4s'
E2	23-26	'DPT'	Dew Point unit identifier	N/A	'%3s'
F2	28-33	'PRESS'	Pressure unit identifier	N/A	'%5s'
G2	35-37	'IR'	Index of refraction unit identifier	N/A	'%2s'
H2	40-41	'RH'	Relative Humidity unit identifier	N/A	'%2s'

Table 17: LRFE MDTF of Significant Levels Data

Field #	Columns	Contents	Field Definition	Units	Format Read Statement
A3	1-6	XXXXXX	Significant altitude	MSL Feet	'%6d'
B3	8-10	XXX	Wind direction	Degrees	'%3d'
C3	1214	XXX	Wind speed	Knots	'%3d'
D3	16-20	XXX.X	Temperature	Celsius	'%5.1f'
E3	22-26	XXX.X	Dew Point	Celsius	'%5.1f'
F3	28-33	XXXX.X	Pressure	Millibars	'%6.1f'
G3	35-37	XXX	Index of Refraction	N	'%3d'
H3	40-41	XXX	Relative humidity	Percent	'%3d'

Table 18: LRFE MDTF of File Termination Records

Field #	Columns	Contents	Field Definition	Units	Format Read Statement
A1	1-11	TERMINATION	Termination identifier	N/A	'%12s'
A2	1-3	XXX	File checksum	N/A	'%3s'
B2	5-7	XXX	File checksum repeated	N/A	'%3s'
A3	Blank line				

The HRFE and the Jimsphere are recorded in the HRFE MDTF, and the standard output file provides data which are interpolated in 100 foot increments. Also, data from a LRFE can be reported in this format, but only the wind information is recorded. An LRFE being recorded in this format is known as an LRFE Winds Only AMPS file (LWAM). Unlike the LRFE MDTF, the HRFE MDTF does not have either Mandatory or Significant data sections. The HRFE data are segregated into 5,000 foot blocks, with an individual file containing data for each block. This architecture allows data to be transmitted from the balloon before the balloon has completed its ascent. The first line of the file contains the filename, which includes the transmission time of the block. The time of the balloon release is in the header of the file. At the end of the 5,000-foot block, a terminator flag will either state that the end of the block has been reached, or if the balloon has reached its highest altitude.

```
HR010861830
TEST NBR G6144
HI-RES AMPS WIND DAT
CAPE CANAVERAL AFS, FL.
1737Z  27 MAR 07

  ALT   DIR    SPD   SHR   ASCENT   DATA
GEOMFT DEG    KTS  /SEC   F/S     QUALITY

 45100 288   59.1 .021   14.5        1
 45200 287   56.2 .052   14.7        1
 45300 288   55.1 .026   14.9        1
...
 50000 270   24.3 .037   12.0        1
END OF BLOCK       50000
036 036
NNNN
```

Figure 5: Example of HRFE MDTF

The winds only flight elements use the fixed MDTF header that is outlined in Table 3. Tables 18-20 describe the MDTF for the data header, the levels of data, and the termination or end of block data records.

Table 19: Winds Only AMPS Flight Element MDTF of Header Data

Field #	Columns	Contents	Field Definition	Units	Format Read Statement
A6	Blank Line				
A7	3-5	'ALT'	Altitude of measurements identifier	N/A	'%3s'
B7	8-10	'DIR'	Wind direction identifier	N/A	'%3s'
C7	14-16	'SPD'	Wind Speed identifier	N/A	'%3s'
D7	19-21	'SHR'	Shear identifier	N/A	'%3s'
E7	24-29	'ASCENT'	Ascent identifier	N/A	'%6s'
F7	32-35	'DATA'	Data Quality identifier	N/A	'%4s'
A8	Blank Line				
A8	1-6	'GEOMFT'	Altitude unit identifier	N/A	'%6s'
B8	8-10	'DEG'	Wind direction identifier	N/A	'%3s'
C8	14-16	'KTS'	Wind speed unit identifier	N/A	'%3s'
D8	18-21	'/SEC'	Shear unit identifier	N/A	'%4s'
E8	24-26	'F/S'	Ascent unit identifier	N/A	'%3s'
F8	31-37	'QUALITY'	Data Quality identifier	N/A	'%7s'
A9	Blank Line				

Table 20: Winds Only AMPS Flight Element MDTF of Data

Field #	Columns	Contents	Field Definition	Units	Format Read Statement
A10	1-6	XXXXXX	Altitude	Feet	'%6d'
B10	8-10	XXX	Wind Direction	Degrees	'%3d'
C10	12-16	XXX.X	Wind Speed	Knots	'%5.1f'
D10	18-21	.XXX	Shear	Seconds^{-1}	'%4.3f'
E10	23-27	XXX.X	Ascent	Feet per second	%5.1f'
F10	32-34	X	An "I" in column 32 for interpolated data or layer depth in hundreds of feet in column 34	N/A	'%3s' '%3d'

Table 21: Winds Only AMPS Flight Element MDTF of Termination Records

Field #	Columns	Contents	Field Definition	Units	Format Read Statement
A1	1-13	'END OF BLOCK' Or 'TERMINATION '	End of block or Termination flag	N/A	'%13s'
B1	18-23	XXXXXX	Altitude at the end of the block or at termination	Feet	'%6d'
A2	1-3	XXX	Checksum total	N/A	'%3d'
B2	5-7	XXX	Repeated checksum total	N/A	'%3d'

3.5 4DLSS

As stated in the introduction, 4DLSS is no longer used by the MSICWG community. 4DLSS had two systems: the CGLSS and LDAR, each with its own data formats. However, only data from CGLSS were archived by the KSC Weather Archive and currently are available to the MSICWG community. Data from the CGLSS were recorded in three different files: accumulated lightning strikes for the last hour (MDL), 24 hours' worth of lightning strikes from the previous day (MEL), and daily accumulated lightning strikes from MD files (ML). Each of these files has a different file naming convention. MDL files following this naming convention: MD.YYYYCCC-HH, where YYYY is the year, CCC is the day of the year, and HH is the hour of accumulated lightning strikes. MEL files following this naming convention: ME.YYCCC-HHMM, where YY is the two digit year, CCC is the day of the year, HH is the hour and MM is the minute of the file creation. ML files following this naming convention: MLYYYYCCC, where YYYY is the year and CCC is day of the year. All three files follow the same format. An example of this file format is shown below:

```
USE CAUTION: ENSURE DATA IS REASONABLE
DATA MAY NOT BE CURRENT
(UPDATED ON 2017054 AT 19:04:42 GMT)
DAY[CYD]  HMS[HMS]  LAT[DEG]  LON[DEG]      NSTR  RS  DF1  DF2   FLAG
--------- --------- --------- --------- --------- --- ---- ----   ----
  2017054    182957   28.4938   78.2218      47.4   0    1    6   +
Number of matches found = 1
```

Figure 6: Example of CGLSS MIDDS Format

The CG format includes a header with the time of file creation, and data fields in the main body of the file that contain the date, time, latitude, longitude, signal strength in kiloamps (NSTR, which is short for normalized signal strength), event classification (RS), first detecting sensor (DF1), second detecting sensor (DF2), and quality flag (FLAG).

Both CG and CC data are available via the KSC Weather Archive in the American Standard Code for Information Interchange (ASCII) format. The KSC Weather Archive CC data format includes the date and time of a measured event, down to a millionth of a second. The file format has an event flag which is used to identify the system that measured the lightning strike. The specific system identifier also informs users if the lightning event was a cloud-to-cloud (4DLSS) or cloud-to-ground (CGLSS) event. A third identifier flag, CAL, is used to show when the system is being recalibrated. These files also have a large header that includes language about the system, how to interpret the location data, and how to interpret the Event Type flags.

The following Lightning Detection and Ranging (LDAR) and Cloud to Ground Lightning Surveillance (CGLSS) data sets are displayed in a tab delimited format:

The EVENT TYPE field will display the data type as an LDAR EVENT, GGLSS EVENT or CAL EVENT. A CAL EVENT is a locally generated simulated lightning event used to validate the operation status of the Kennedy Space Center's LDAR System.

The X, Y and Z coordinates are in reference to the Kennedy Space Center's LDAR Central Site located at Latitude 28 32 18.55N and Longitude 80 38 33.48W

JDAY	TIME(UTC)	X(M)	Y(M)	Z(M)	EVENT TYPE
183	00:00:20:133667	-0132209	-0095197	+10521	4DLSS EVENT
183	00:00:20:199356	-0134280	-0098734	+12482	4DLSS EVENT
183	00:00:20:228561	-0128908	-0090532	+07224	4DLSS EVENT
183	00:00:20:246746	-0033201	+0132558	-01438	CGLSS EVENT
183	00:00:20:258878	-0127219	-0088803	+09487	4DLSS EVENT
183	00:00:20:334670	-0029974	+0111586	-01019	CGLSS EVENT
183	00:00:21:979626	-0001300	-0001500	+00500	CAL EVENT
183	00:00:24:212036	-0135174	+0018812	-01427	CGLSS EVENT
183	00:00:24:236536	-0133614	+0018580	-01394	CGLSS EVENT
183	00:00:24:295239	-0131873	+0016984	-01353	CGLSS EVENT
183	00:00:24:400512	-0136476	+0019925	-01458	CGLSS EVENT
...					

Figure 7: Example of 4DLSS CC KSC Weather Archive Format

The KSC Weather Archive CG data format consists of the date of the lightning strike, the time of the lightning strike to the ten millionth of a second, latitude, longitude, the signal strength, the event type, the semi-major and semi-minor axes, ellipse angle, and a field that lists all sensors that measured the lightning event.

02/15/2017	03:12:12.4259955	29:51:06	-79:22:26	-42.5	0 r	07.20	00.80	044	1,2,4,5,6
02/15/2017	04:00:50.1067767	29:40:58	-79:25:03	37.6	0 r	05.90	00.70	048	2,5,6
02/15/2017	04:29:46.6879559	28:54:20	-79:09:49	-23.5	0 r	04.40	00.60	074	1,2,5,6
02/15/2017	04:40:28.4912558	29:21:41	-79:13:58	-40.5	0 r	04.50	00.50	060	1,2,4,5,6
02/15/2017	04:43:03.6909311	28:55:04	-79:03:14	27.8	0 r	09.30	01.00	069	2,6
02/15/2017	04:52:04.5960794	28:55:45	-79:05:26	-30.7	0 r	04.00	00.50	075	1,2,4,5,6
02/15/2017	04:54:27.8691981	28:54:41	-79:07:56	-25.0	0 r	04.20	00.60	075	1,2,4,5,6
02/15/2017	04:57:13.6232418	28:58:38	-78:55:29	-33.2	0 r	04.90	00.60	074	1,2,4,5,6
02/15/2017	04:57:13.8708680	29:08:59	-78:33:32	-67.4	0 r	08.90	00.80	071	1,2,4,5,6

Figure 8: Example of 4DLSS CG KSC Weather Archive Format

3.6 MERLIN

MERLIN was operationally accepted in April 2017. Like 4DLSS, MERLIN produces both CC and CG data files. The MERLIN CC and CG data files are stored on the KSC Weather Archive and follow the same format as the KSC Weather Archive 4DLSS CC and CG files. The MERLIN CC and CG KSC Weather Archive data file format includes date, time to the ten millionths of a second, the location data, the signal strength, the event type, the semi-major and semi-minor axes, ellipse angle, and a field that lists all sensors that measured the lightning event. There exists no header in the file format.

```
06/10/2016  14:10:10.6454637   26:34:01  -87:24:42  -27.1   0 r   02.10  00.30  063  100,101,102,103,104,107
06/10/2016  14:10:15.4461190   26:50:24  -77:04:41  -73.4   0 r   00.20  00.10  067  100,102,103,104,106,107,108,109
06/10/2016  14:10:15.5996419   26:49:51  -77:04:09  -55.6   0 r   00.20  00.10  067  100,102,103,104,106,107,108,109
06/10/2016  14:10:16.0138702   26:50:24  -77:04:46  -17.7   0 r   00.70  00.20  047  103,104,106,107,109
06/10/2016  14:10:19.1649278   27:17:07  -84:51:07  -58.8   0 r   00.70  00.20  059  100,101,103,104,106
06/10/2016  14:10:19.1860772   27:17:02  -84:51:08  -19.5   0 r   00.60  00.20  061  100,101,102,103,104,106
06/10/2016  14:10:19.2111044   27:17:08  -84:51:05  -37.5   0 r   00.60  00.20  060  100,101,102,103,104,106,107
06/10/2016  14:10:19.2352152   27:17:07  -84:51:05  -22.3   0 r   00.60  00.20  060  100,101,102,103,104,106,107
06/10/2016  14:10:19.2526206   27:17:08  -84:51:04  -24.1   0 r   00.60  00.20  060  100,101,102,103,104,106,107
06/10/2016  14:10:19.3154620   27:17:00  -84:52:57  -20.7   0 r   00.60  00.20  056  100,101,102,103,104,106,107
06/10/2016  14:10:19.3807388   27:21:15  -84:45:11   15.3   0 r   02.00  00.30  035  101,102,103,106
06/10/2016  14:10:19.8807928   26:45:04  -78:09:27   10.4   0 r   00.50  00.20  041  102,104,106,109
06/10/2016  14:10:21.1898736   27:13:28  -78:20:05    9.2   0 r   00.60  00.10  037  103,104,106,107,109
06/10/2016  14:10:27.5821596   27:14:29  -78:22:05   11.0   0 r   00.30  00.10  047  100,102,103,104,106,107,109
...
```

Figure 9: Example of MERLIN CC and CG KSC Weather Archive Format

The file format for MERLIN's CC and CG data used by the Air Force is to be determined. Meetings are currently scheduled with instrument technicians, data archivists, and data analysts from both the ER and KSC during the summer of 2018 to determine the format that the ER will use for CC and CG data. This data will be made available on REIN once a format has been decided upon. Once decided upon and implemented, this report will be updated to include the MERLIN CC and CG ER formats.

3.7 LPLWS –Field Mill & Rain Gauge Network

The LPLWS field mill electric potential data are available in comma separated variable (CSV) files. Each file contains data from five one-minute timestamps. A file is generated every five minutes. These files have two lines of header data. The first line includes the file name, the field mill identifier, the time of the first time stamp, the day, month, and year. The file name follows the naming convention of LPYYYDDDHHMM, where YYYY is year, DDD is the day of the year, and HHMM is the time in 24 hour Greenwich Mean Time. The second line provides the header data for each row of data, where the first column is the site ID followed by the number of minutes from the time listed on the first line. The body of data starts on the third line.

```
LP20181550000,KSC,Field Mill,0000Z,4,JUN,18
Site,0,1,2,3,4,
Field Mill 1,-748.79,-779.61,-731.48,-569.72,-469.25,
Field Mill 2,-295.55,-298.06,-285.97,-224.47,-252.64,
Field Mill 4,-13.92,-19.97,-19.08,15.71,32.18,
Field Mill 5,34.13,31.84,29.28,51.67,65.65,
```

Figure 10: Example of LPLWS Field Mill Electric Potential Gradient Format

Like the field mill data, the rain gauge data are in CSV. The rain gauge file provides the hourly and daily rain gauge totals. These files are created only once a day. The first two lines are header data. The first line includes the filename, "KSC" identifier, "Field Mill Rain Gauge" identifier, day, month, and year. The file name follows the naming convention of LGYYYYDDD, where YYYY is the year and DDD is the day of the year. The second line provides the header data for each row of data, where the first column is the site ID, then the second is the latitude of the field mill, the third is the longitude of the field mill, the fourth is the geodetic height of the field mill, the next 24 columns are the hourly totals, and the last two columns are the daily total of rain fall and the comment field.

```
LG2018155,KSC,FIELD MILL RAIN GAUGES,4,JUN,18,,,
```

```
UF070411200
UPPER WIND FORECAST
Kennedy Space Center, FL
1802Z  26 JAN 18

  ALT  DIR   SPD
FT AGL DEG   KTS

     0 200   6.0
  1000 261   7.0
  2000 277  14.0
  3000 287  18.0
  4000 292  22.0
  5000 294  23.0
  6000 294  24.0
  7000 294  24.0
  8000 292  23.0
  9000 289  23.0
 10000 285  23.0
 ...
 48000 248  11.0
NNNN
```

Figure 12: Example of UF MDTF

Below are tables showing the format of the header, data header, and data levels. The number of data levels is dependent on the forecast, vehicle, and location. The lines in Table 23 are relative to each section, not the line number in the file.

Table 22: UF MDTF Header

Field #	Columns	Contents	Field Definition	Units	Format Read Statement
A1	1-2	XX	Equipment Type	N/A	'%2s'
B1	3-4	XX	Site Identification Code	N/A	'%2s'
C1	4-7	XXX	Julian date of forecast	Day of year	'%3s'
D1	8-11	XXXX	Zulu time of forecast	Hour and minute	'%4s'
A2	1-20	UPPER WIND FORECAST	Source Identification	N/A	'%20s'
A3	1-80	String varies in length	Measuring site location	N/A	'%80s'
A4	1-4	XXXX	Zulu time of balloon launch or initial measurement	Hour and minute	'%4s'
B4	5	Z	Indicates Zulu	N/A	'%1s'
C4	8-9	XX	Day of month	Day of month	'%2s'
D4	11-13	XXX	Abbreviated month	Month	'%3s'
E4	15-16	XX	Last two numbers in year	Year	'%2s'

Table 23: UF MDTF of Header Data

Field #	Columns	Contents	Field Definition	Units	Format Read
A5	Blank Line				
A6	3-5	'ALT'	Altitude of measurements	N/A	'%3s'
B6	8-10	'DIR'	Wind direction	N/A	'%3s'
C6	14-16	'SPD'	Wind speed	N/A	'%3s'
A7	1-6	'FT AGL'	Altitude unit identifier	N/A	'%6s'
B7	8-10	'DEG'	Wind direction unit identifier	N/A	'%3s'
C7	14-16	'KTS'	Wind speed unit identifier	N/A	'%3s'
A8	Blank Line				

Table 24: UF MDTF of Data Levels and Termination Flag

Field #	Columns	Contents	Field Definition	Units	Format Read Statement
A9	1-6	XXXXXX	Altitude	Feet	'%6d'
B9	8-11	XXX	Wind direction	Degrees	'%3d'
B9	12-17	XXX.X	Wind speed	Knots	'%4.1f'
A10	1-4	'NNNN'	Termination flag	N/A	'%4d'

4.0 Proposed Format Updates

This section gives an overview of proposed data format updates which have been generated by MSFC Natural Environments Branch (EV44) and approved by the MSICWG. This document does not contain detailed tables describing the proposed formats because the implementation of these formats has not occurred at the time of document release. However, example outputs have been provided.

4.1 WINDS Network, including LC-39B Met Instrumentation

The proposed WINDS Network format is very similar to the current MDTF. The name of the file would remain the same as the current WINDS MDTF naming convention. As with the current format, each line of data would correspond to a single height from the respective tower. The largest differences between the MDTF and the proposed format include changing the file format to a Comma Separated Variable (CSV) format using "-999.0" as a "no data" flag through the file, abbreviating the header to three lines, and adding fields to accommodate for new instruments being added in the WINDS Network upgrade (such as diffuse radiation and reflected radiation at LC-39B). Other changes to the format include adding fields for latitude and longitude, and reordering the heights of a tower such that the heights appear in ascending order.

```
WT010711602 ,CCAFS/KSC ,WIND TOWER DATA,1602Z,11,MAR,16,,,,,,,,,,,,,,
TOWER,LAT,LON,HGT,AV,01 MIN AVG DIR,01 MIN AVG SPD,01 MIN PEAK DIR,01 MIN PEAK SPD,10 MIN PEAK DIR,10 MIN PEAK SPD,DEV,TMP,DIF,DP,RH,PRE,DIFRAD,REFRAD,SLTEMP,SLMOIST
UNITS,DEG,DEG,FT,MIN,DEG,KTS,DEG,KTS,DEG,KTS,DEG,F,F,F,%,MB,W/M2,W/M2,F,MM
108,-999.0000,-999.0000,06,01,-999,-999,-999,-999,-999,-999,-999,77.4,-999.0,-999.0,-999,-999.0,-999.0,-999.0,-999.0,-999.0
108,-999.0000,-999.0000,12,01,139,7,151,15,140,19,22,-999.0,-999.0,-999.0,-999,-999.0,-999.0,-999.0,-999.0,-999.0
108,-999.0000,-999.0000,54,01,141,14,141,19,142,23,11,75.0,-2.4,-999.0,-999,-999.0,-999.0,-999.0,-999.0,-999.0
39 B NW,-999.0000,-999.0000,132,01,157,21,157,25,157,26,4,73.7,-999.0,62.8,69,-999.0,-999.0,-999.0,-999.0,-999.0
39 B NW,-999.0000,-999.0000,133,01,145,17,137,23,157,25,4,74.2,-999.0,61.2,64,-999.0,-999.0,-999.0,-999.0,-999.0
39 B NW,-999.0000,-999.0000,134,01,153,12,153,17,155,21,3,73.7,-999.0,59.8,62,-999.0,-999.0,-999.0,-999.0,-999.0
39 B NW,-999.0000,-999.0000,257,01,156,22,153,24,153,26,3,72.7,-999.0,59.8,64,-999.0,-999.0,-999.0,-999.0,-999.0
39 B NW,-999.0000,-999.0000,258,01,140,19,145,23,144,25,4,73.1,-999.0,61.1,66,-999.0,-999.0,-999.0,-999.0,-999.0
39 B NW,-999.0000,-999.0000,259,01,152,12,153,17,154,19,2,72.8,-999.0,60.0,64,-999.0,-999.0,-999.0,-999.0,-999.0
39 B NW,-999.0000,-999.0000,382,01,161,22,154,24,159,26,2,72.0,-999.0,57.4,60,-999.0,-999.0,-999.0,-999.0,-999.0
39 B NW,-999.0000,-999.0000,383,01,144,19,136,23,149,26,3,72.3,-999.0,60.6,67,-999.0,-999.0,-999.0,-999.0,-999.0
39 B NW,-999.0000,-999.0000,384,01,154,8,160,12,147,13,3,72.2,-999.0,59.9,65,-999.0,-999.0,-999.0,-999.0,-999.0
39 B NW,-999.0000,-999.0000,457,01,158,22,153,24,157,26,2,71.6,-999.0,60.3,68,-999.0,-999.0,-999.0,-999.0,-999.0
39 B NW,-999.0000,-999.0000,458,01,146,19,149,23,145,26,3,71.9,-999.0,60.4,67,-999.0,-999.0,-999.0,-999.0,-999.0
39 B NW,-999.0000,-999.0000,459,01,192,1,193,7,165,9,47,72.0,-999.0,59.5,65,-999.0,-999.0,-999.0,-999.0,-999.0
...
```

Figure 13: Example of Proposed WINDS Format

4.2 KSC TDRWP

The proposed TDRWP format is very similar to the current MDTF but includes descriptors for the metadata, space-delimited values in the main body of data, and fields to accommodate for a four beam configuration. The first line of the file includes the date and time when the profile was created. Note that the metadata have moved from the footer to the header in the format. The metadata are contained in three lines: one for descriptors of data, one for units, and one for data values. The name of the file would remain the same as the current TDRWP MDTF naming convention. In the figure below, the three metadata lines have been wrapped so that they could fit onto one page.

```
TDRWP 16 6 20 0924Z
      E AZI        N AZI       V AZI        E ELE        N ELE        V ELE        #FFT E TMEDOMAVG N TMEDOMAVG V TMEDOMAVG  E SPECAVG   N SPECAVG V SPECAVG
       DEG          DEG         DEG          DEG          DEG          DEG          NA        NA          NA          NA          NA          NA          NA
     135.0         45.0         0.0         75.3         75.3         90.0         096        30          30          30           3           3           3
  E PULREP     N PULREP  V PULREP E VERTGTSPC N VERTGTSPC V VERTGTSPC E VERTGTWID N VERTGTWID V VERTGTWID   MAXACVOLT  MINACVOLT  TRANSPOWER NOISETEMP
  MICROSEC     MICROSEC  MICROSEC       METER        METER        METER        METER       METER       METER       VOLTS      VOLTS          KW     DEG K
     153.8        153.8     153.8         149          149          149          149         149         149         640          0         187        20
REFLECTPWR   DRVROUTPWR  DRVRINPWR   TRANSTEMP  ENCLOSTEMP   FLOODALRM   ACSALRM  CODEBITS ETPMDFLTCD N TPMDFLTCD V TPMDFLTCD E RUNMEANCD N RUNMEANCD V RUNMEANCD
      WATTS        WATTS     WATTS       DEG K       DEG K           NA        NA        NA          NA          NA          NA          NA          NA          NA
       2919            0         0           0           0           47         4         0           5           3           3           3           0           0           0           0           5
 ALT  DIR   SPD   SHR    WW   S1   S2   S3   S4   N1   N2   N3   N4  WID1  WID2  WID3  WID4  G  G  G  G  QC  QC  QC  QC
GEOM  DEG   M/S  /SEC   M/S   DB   DB   DB   DB   DB   DB   DB   DB   M/S   M/S   M/S   M/S  1  2  3  4   1   2   3   4
1798  234  14.0  .000 -0.12 111.5 109.9 110.8 110.5 62.0 62.6 62.3 62.4  0.8   0.5  0.64  0.74  0  0  0  0  64  64  64  64
1948  233  14.0  .001 -0.06 115.0 114.6 114.8 114.7 62.1 62.7 62.4 62.3  0.9   0.5  0.70  0.62  0  0  0  0  64  64  64  64
2098  238  14.3  .008 -0.19 117.7 117.3 117.5 117.6 60.5 61.2 60.9 61.0  0.9   0.5  0.68  0.72  0  0  0  0  64  64  64  64
2247  242  14.4  .006 -0.18 118.0 113.5 116.3 115.4 61.3 61.9 61.6 61.5  0.7   0.5  0.60  0.65  0  0  0  0  64  64  64  64
2397  244  14.4  .004 -0.09 118.7 117.2 118.0 117.9 62.2 62.6 62.4 62.3  0.9   0.5  0.70  0.69  0  0  0  0  64  64  64  64
...
NNNN
```

Figure 14: Example of Proposed KSC TDRWP Format

4.3 915-MHz DRWP

The proposed 915-MHz DRWP format has several key changes from the current MDTF. All of the data that currently exists in the MDTF are retained in the proposed format. The largest differences entail that an individual file would be created for each DRWP rather than the current practice of putting data from all available DRWPs into one MDTF file. Also, changes would include the addition of text in the header to provide descriptors for data values and units. Additional proposed changes include making the header only three lines: one for value descriptors, one for units, and one for data values. The naming convention for the proposed format is RWxxCCCHHMM, where xx is the identifier for the specific 915-MHz DRWP, CCC is the day of the year, HH is the hour, and MM is the minute of the profile generation. In the figure below, the three lines of the header have been wrapped to fit onto one page. The first line of the proposed file includes the DRWP identifier, date, and profile creation time. The main body of data below the header would have two lines for data descriptors and units. Each altitude's data are no longer split between two lines; instead, all data from a range gate are one line and the data is space delimited.

```
DRWP 1 16 03 25 1946
    R_Lat        R_Lon        R_Alt        Year         Mon         Day          Hr         Min         Sec       TDiff Con_Avg_Per #_rec_1    #_rec_2
    28.40        80.60            3          16          03          25          19          46          14           0          14       10         10
  #_rec_3      #_rec_4      #_rec_5       Req_1       Req_2       Req_3       Req_4       Req_5      Con_1       Con_2       Con_3    Con_4      Con_5
        9            0            0           6           6           6           0           0       2.00        2.00        3.00     0.00       0.00
#_obl_coh    #_ver_coh    #_obl_spc #_ver_spc obl_pul_wid ver_pul_wid obl_per ver_per obl_nyq ver_nyq     Cor_ind obl_del    ver_del
      170          170           42          42        1400        1400      47      47    10.3    10.3           1    2100       2100
  #_obl_gat #_ver_gat obl_gat_spc ver_gat_spc       azi_1       azi_2     azi_3     azi_4   ele_1   ele_2       ele_3    ele_4
       60           60          700         700          91           1         0         0      75      75           0        0
   ALT    SPD    DIR    RV1    RV2    RV3    RV4    RV5    NR1    NR2    NR3    NR4    NR5   SNR1   SNR2   SNR3   SNR4   SNR5
    KM    M/S    DEG    M/S    M/S    M/S    M/S    M/S    N/A    N/A    N/A    N/A    N/A     dB     dB     dB     dB     dB
 0.130    5.5    200   0.00  -0.50  -1.40   9999   9999      6      7      7   9999   9999     14     13     10   9999   9999
 0.231    4.5    203  -0.10  -0.50  -1.20   9999   9999      7      7      7   9999   9999     14     15     12   9999   9999
 0.332    3.9    204  -0.10  -0.50  -1.10   9999   9999      6      7      7   9999   9999     12     14     11   9999   9999
 0.434    3.2    216  -0.20  -0.60  -0.90   9999   9999      6      7      7   9999   9999     11     12     10   9999   9999
 0.535    3.0    231  -0.20  -0.80  -0.70   9999   9999      6      7      7   9999   9999      8     10      8   9999   9999
...
```

Figure 15: Example of Proposed 915-MHz DRWP format

4.4 LRFE

The proposed LRFE file format is similar to the current MDTF. All data are retained from the MDTF, and the additional data fields added are ascent, latitude and longitude. The largest differences are the restructuring of the three sections of data. A proposed identifier field is added to the beginning of each line to show if the data from that altitude is either interpolated or from a mandatory or significant altitude. Thus, the additional termination flags are no longer needed. The data fields have been rearranged to include fields from all three sections and a no data flag, "-999", is used if that field does not pertain to that type of level. For example, mandatory altitudes require geopotential feet, but not shear, thus a "-999" flag is given for shear. The naming convention for the proposed format would follow the same convention as the LRFE MDTF.

```
LR012722350 201509292350 CCAFS
RAWINSONDE AMP/LR TEST NBR A1806 WS1
ID    ALT    ALT  DIR    SPD  SHR ASCENT   TEMP    DPT   PRESS   RH  ABHUM DENSITY   I/R  V/S     VPS   PW  LATITUDE LONGITUDE
   GEOMFT GEOPFT  DEG    KTS /SEC    F/S   DEGC   DEGC     MBS  PCT   G/M3    G/M3     N  KTS     MBS   MM   DEGREES   DEGREES
I      16   -999  210    4.0 -999   -999   27.5   25.9 1008.80   91  24.09 1154.28   398  680   33.42    0   34.9286 -117.9033
I    1000   -999  246   16.4 .023   -999   25.3   22.0  975.32   82  19.16 1126.81   364  677   26.39    6 -999.0000 -999.0000
I    2000   -999  270   15.6 .011   -999   23.2   20.9  942.16   87  18.03 1096.59   351  674   24.66   12 -999.0000 -999.0000
I    3000   -999  276   16.8 .004   -999   21.3   19.6  909.92   90  16.84 1066.31   338  672   22.88   17 -999.0000 -999.0000
I    4000   -999  290   18.2 .007   -999   19.6   18.1  878.55   91  15.35 1036.14   323  670   20.74   22 -999.0000 -999.0000
I    5000   -999  284   19.8 .004   -999   18.0   17.2  848.10   95  14.61 1005.90   312  668   19.63   27 -999.0000 -999.0000
...
M    -999    758    8    9.0 -999   -999   16.8    7.3 1000.00   54 -999.00 -999.00  -999 -999 -999.00 -999 -999.0000 -999.0000
M    -999   2182   79   10.0 -999   -999   12.6    5.6  950.00   62 -999.00 -999.00  -999 -999 -999.00 -999 -999.0000 -999.0000

M    -999   2915   94   12.0 -999   -999   10.8    4.9  925.00   67 -999.00 -999.00  -999 -999 -999.00 -999 -999.0000 -999.0000
...
S     800   -999    8    8.0 -999   -999   16.6    7.2  998.50   54 -999.00 -999.00   313 -999 -999.00 -999 -999.0000 -999.0000
S    3900   -999  103   15.0 -999   -999    8.2    4.2  892.40   76 -999.00 -999.00   285 -999 -999.00 -999 -999.0000 -999.0000

S    4100   -999  103   14.0 -999   -999    7.6    3.8  885.80   77 -999.00 -999.00   283 -999 -999.00 -999 -999.0000 -999.0000

...
NNNN
```

Figure 16: Example of Proposed LRFE Format

4.5 AMPS Winds Only Flight Elements

The proposed AMPS Winds Only format is similar to the HRFE MDTF. The same naming convention used by HRFE MDTF is used for the proposed AMPS Winds Only format. The largest differences entail including latitude and longitude and space delimited values, as well as condensing the first line relative to the MDTF header.

```
LWAM 16 NOV 19 2257
  ALT    DIR    SPD    SHR   ASCENT    DATA    LATITUDE LONGITUDE
GEOMFT   DEG    KTS   /SEC    F/S    QUALITY    DEGREES   DEGREES
    16     0     .0   .999    99.9       I    -999.0000 -999.0000
   100   281    1.8   .999    99.9       I    -999.0000 -999.0000
   200   281    3.6   .999    99.9       I    -999.0000 -999.0000
   300   281    5.4   .053    17.2       1    -999.0000 -999.0000
   400   276    8.1   .046    17.2       1    -999.0000 -999.0000
   500   279   10.0   .034    17.9       1    -999.0000 -999.0000
...
```

Figure 17: Example of Proposed AMPS Winds Only Balloons Format

4.6 MERLIN

As stated in section 3.6, the ER is currently developing formats for the CC and CG data files. At the time of this report, the proposed formats were not detailed enough to be included.

4.7 LPLWS -Field Mill & Rain Gauge Network

No proposed data changes are being suggested by the MSICWG at this time due to the data format recently being changed.

4.8 ER C-Band Weather Radar

Data from the ER C-Band Weather Radar are not being considered for any format changes at this time, as many users at JSC, KSC, and the ER would require a software change from McIDAS to view the data.

5.0 Data Networks

This section provides overview diagrams and descriptions of the systems used to process and distribute weather data by members of the MSICWG. These charts are largely based off of community input and NASA ESD-10025 Communications, Network, and Tracking Architecture Document (CNTAD) prepared by the Integrated Communications, Network and Tracking (ICAN) Team.

5.1 ER MIDDS and REIN System

The ER and KSC work collaboratively to gather data from their respective sources onto the primary and back up MIDDS servers. The ER provides data from balloons, the 915-MHz DRWPs, and WINDS towers. The balloons are released at Cape Weather Station A, their data are recorded by the AMPS servers, and finally the data are sent to the Meteorological Systems Computer (MSC) to be converted to MDTF. KSC provides data from the TDRWP. The radar computer on site gathers the data and sends the data to the MIDDS servers. During DOL activities, an operator can review and edit the TDRWP data files at Cape Weather Station A. There also exists a MIDDS workstation with the servers and at the Cape Weather Station A to visualize the data for forecasters and analysts across the ER.

In order to provide data to users that are external to the Air Force, the MIDDS servers disseminate the data via REIN through two means. The first method is to collect the data from the MIDDS servers and the other ER instruments (including the LPLWS field mills and rain gauges, MERLIN, and the C-Band Radar) and store the data onto the REIN Internal Servers. These servers are only accessible to the Air Force. To make the data available to external users, the data are passed through a REIN Internal Firewall to a De-Militarized Zone (DMZ) Server. All data are transferred to the REIN DMZ Server except for the C-Band Radar. The data stored on the REIN DMZ servers can be accessed via an outward facing internet portal, however, the REIN Perimeter Firewall requires a Common Access Card (CAC) for users to access these servers. The second method for data dissemination takes advantage of the direct connections to MSFC and JSC. Since these connections are secure, physical connections, a CAC is not needed. The Unidata software suite Local Data Manger (LDM) is used to move data from the MIDDS servers to the servers at MSFC and JSC. The direct connections used by MSFC and JSC pass through REIN, but do not access the REIN Internal or REIN DMZ servers. Since LDM does not access the REIN DMZ servers, data from LPLWS and MERLIN are not sent to MSFC or JSC.

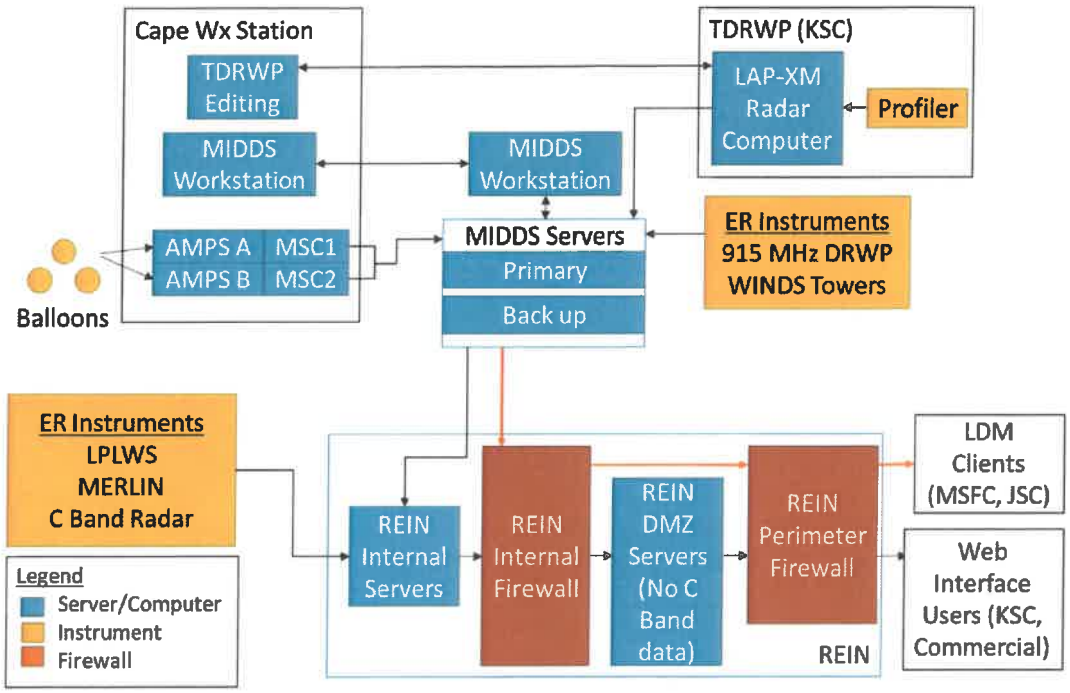

Figure 18: ER MIDDS and REIN Network and System

5.2 KSC Weather Networks

KSC accesses weather data from the REIN DMZ Server via an internet portal. The connection from REIN enters KSC through the Communication Distribution and Switching Center (CD&SC) and passes through a firewall. From there, the connection passes to the Kennedy Data Center (KDC). Here the data from REIN goes to weather servers that host the KSC Weather Archive. Also, the weather servers run a script that checks the REIN DMZ servers every five minutes for new data. This script is able to navigate through the website and provide the security certificate in such a manner that simulates a manual interaction. These data are forwarded to the Checkout, Control, and Monitor Subsystem (CCMS) Server where the data are passed to the Launch Control Center (LCC) Network. Finally, the data are passed to the LCC Firing Room. The LCC Firing Room contains the computers that control and perform vehicle checkouts during launch preparations.

Data from the Weather Servers at the KDC also passes back through the firewall at the CD&SC to the Communication Services Office (CSO). From the CSO, the data are sent to MSFC and JSC through the Human Space Flight Network (HSFNet). In addition to the data being sent via the HSFNet, data from the MIDDS servers are sent to MSFC and JSC LDM clients however, this data takes a slightly different path through KSC. The data sent by the LDM server software on the MIDDS Servers passes through REIN, the CD&SC (bypassing the KSC Firewall and path to the KDC and LCC), and finally to the CSO where the data exits KSC via the Serial Legacy Network to MSFC and JSC. The Serial Legacy Network provides a 56 kilobyte per second connection to MSFC and a 256 kilobyte per second connection to JSC.

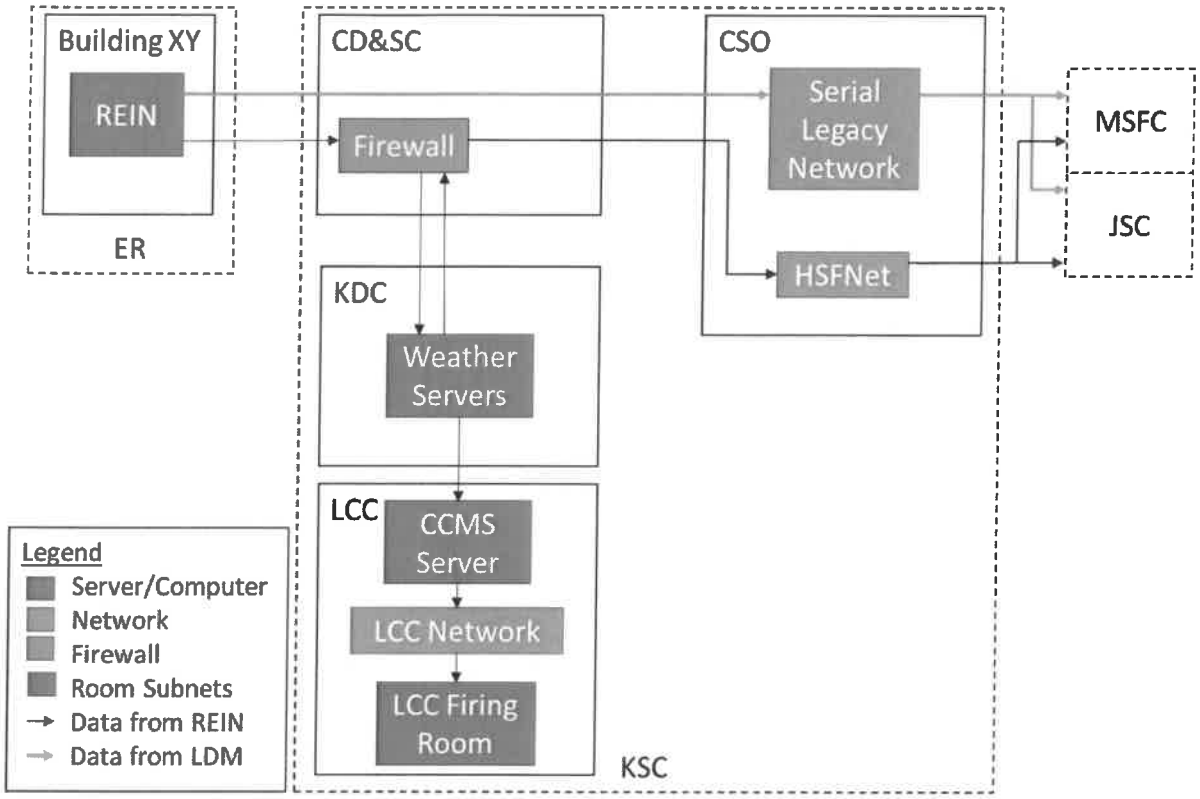

Figure 19: KSC Weather Systems and Networks

5.3 MSFC Natural Environments System

The Huntsville Operations Support Center (HOSC) provides the gateway for data for MSFC from KSC and JSC. There are two networks from KSC that provide data to MSFC; the Serial Legacy Network and the HSFNet. The data from the HSFNet enters the HOSC and must pass through a firewall, then enters the Space Launch System (SLS) Local Area Network (LAN), and then passes into the Weather Subsystem. The Weather Subsystem is a series of servers separate from the MSFC Natural Environments servers, used by other SLS engineers. The data from HSFNet does not go any further from this point.

The second network that provides data to the HOSC is the Serial Legacy Network. The MIDDS servers at the ER use the LDM software suite to disseminate data via this network. The network follows the same path as the HSFNet, but only passes through the Weather Subsystems and provides no data to those servers. From the Weather Subsystems, the network connects to the Natural Environment and Mission Assurance (NEMA) LAN which connects to the SLS Engineering and Support Center (SESC) Subnet. Within the SESC, there exists a room dedicated to NEMA activities with zero-client computer consoles to access the three Natural Environment virtual machines. The network connection extends to these virtual machines so that they can use LDM to download meteorological data in support of archival and DOL activities.

The Natural Environments virtual machines also receive data from the LDM servers at JSC. The connection from JSC connects to the Weather Subsystems then to the NEMA LAN, and finally to the virtual machines. These data are the same as what is sent from the ER MIDDS servers and acts as a form of redundancy so no data are lost if a connection to KSC or the ER is lost.

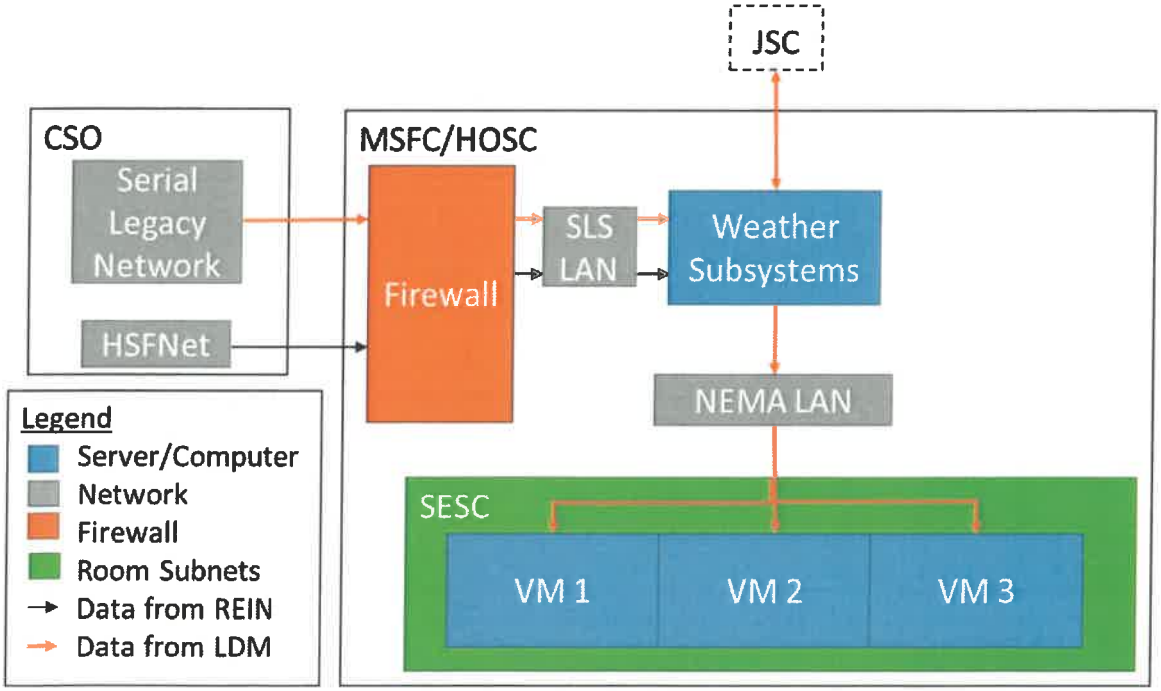

Figure 20: MSFC Natural Environments Network Systems

5.4 JSC Weather Systems and Networks

Like MSFC, JSC receives two data networks from the CSO: the Serial Legacy Network and the HSFNet. The HSFNet data enters JSC and passes through a firewall. Once through the firewall, the data goes to the Weather Distribution virtual machines. These virtual machines sort data coming into the Mission Support Environment (MSE) and determine if the data needs to stay in the MSE or go to the Mission Critical Environment (MCE). These virtual machines also have LDM installed and send data to the HOSC. The Weather Distribution virtual machines send the data from the HSFNet to MCE Server. The data from the Serial Legacy Network enters JSC at the MSE and goes to the MSE Weather Subsystem. This subsystem receives data from multiple sources; not only includes the data from ER MIDDS, but also the Advanced Weather Interactive Processing System (AWIPS) and other data products used by SMG. The data from the Serial Legacy Network then enters into the MIDDS LAN and then to the MSE Workstation. This workstation uses the McIDAS software to visualize the data received.

The data from the Serial Legacy Network also goes through the MSE LAN via the MIDDS LAN. Then, the data passes through another firewall to get to the Weather Distribution virtual machine. As stated before, these virtual machines have LDM, and collect the data sent via the Serial Legacy Network. These data are then sent from the virtual machines to the MCE Server. Now in the MCE, the data enters into the MCE LAN and can be split into two different systems: the MCE virtual machines or the MCE Workstation. Like the MSE Workstation, the MCE Workstation uses McIDAS software to visualize the data. The MCE virtual machines have software designed to support DOL activities. These virtual machines use the data from the Serial Legacy Network.

As part of the DOL activities, these virtual machines will also receive data from the HOSC at MSFC. The data from the HOSC will enter JSC at the same firewall that the HSFNet uses to enter JSC, go through the Weather Distribution virtual machines at the MSE, go to the MCE and the MCE Server, then enter the MCE LAN, and finally arrive at the MCE virtual machines.

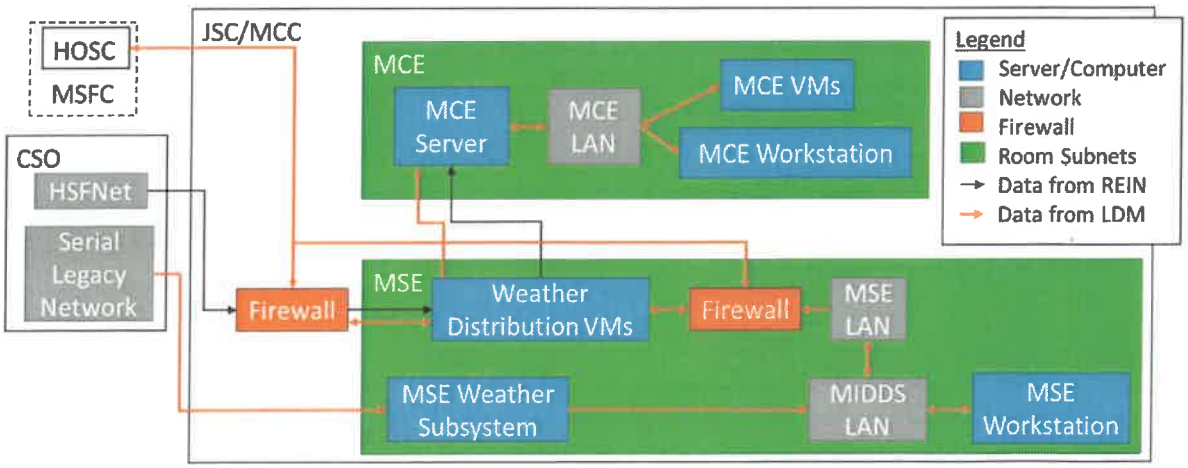

Figure 21: JSC MIDDS Network and System

Appendix A: Acronyms

4DLSS	4 Dimensional Lightning Surveillance System
AMPS	Automated Meteorological Profiling System
CCAFS	Cape Canaveral Air Force Station
CCMS	Checkout, Control, and Monitor Subsystem
CD&SC	Communication Distribution and Switching Center
CSO	Communication Services Office
CSV	Comma Separated Variable
DMZ	De-Militarized Zone
DOC	Delta Operations Center
DOL	Day of Launch
DOLILU	Day of Launch Initialization Load Update
DRWP	Doppler Radar Wind Profiler
ER	Eastern Range
ERDAS	Eastern Range Dispersion Assessment System
GPS	Global Positioning System
HOSC	Huntsville Operations Support Center
HRFE	High Resolution Flight Element
HSFNet	Human Space Flight Network
KSC	Kennedy Space Center
LAN	Local Area Network
LCC	Launch Control Center
LDM	Local Data Manger
LPLWS	Launch Pad Lightning Warning System
LRFE	Low Resolution Flight Element
LWAM	Low Resolution Flight Element Winds Only AMPS
MCC	Mission Control Center
MCE	Mission Critical Environment
McIDAS	Man computer Interactive Data Access System
MERLIN	Mesoscale Eastern Range Lightning Information Network
MIDDS	Meteorological Interactive Data Display System
MSC	Meteorological Systems Computer
MSE	Mission Support Environment
MSFC	Marshall Space Flight Center
MSICWG	Meteorological Support Interface Control Working Group
NASA	National Aeronautics and Space Administration
NEMA	Natural Environments and Mission Assurance
REIN	Range External Interface Network
SLS	Space Launch System
SMG	Spaceflight Meteorology Group
TDRWP	Tropospheric Doppler Radar Wind Profiler
UF	Upper Air Forecast
USAF	United States Air Force
WINDS	Weather Information Network Display System

Appendix B: References

Brenton, James, "EV44 Natural Environments New Archive System", Jacobs ESSSA Group for NASA, 10 October 2016, ESSSA-FY16-2876

Brenton, James, "March 2017 Meteorological Support Interface Control Working Group (MSICWG) Instrumentation, Data Format, and Networks Document", Jacobs ESSCA Group for NASA, 15 March 2017, ESSSA-FY17-903

"Cross-Program Communications, Network, and Tracking Architecture Document (CNTAD)", NASA, ESD-10025, 2018

Huddleston, Lisa, "KSC Weather Archive." NASA, 2 August 2016. http://kscwxarchive.ksc.nasa.gov/

Roberts, Barry, "A Review of DOLILU Meteorological Data requirements and the MIDDS Network Infrastructure for EM01", 27 May 2014, Presentation.